Sheet Metal Forming

IME 240/340

Sheet Metal Forming

- For products with versatile shapes and lightweight
- Dates to 5000 B.C.
- Products include metal desks, file cabinets, appliances, car bodies, beverage cans
- Common materials: low-carbon steel, aluminum or titanium
- First take sheet plate and cut into pieces by shearing, slitting, cutting, or sawing or produce from coil
- Then form into shapes by punching, blanking, stamping, embossing, bending, forming, deep drawing, and a variety of other processes

Sheet Metal Characteristics

TABLE 16.2

Characteristic	Importance
Elongation	Determines the capability of the sheet metal to stretch without necking and failure; high strain-hardening exponent (n)and strain-rate sensitivity exponent (m)desirable.
Yield-point elongation	Observed with mild-steel sheets; also called Lueder's bands and stretcher strains; causes flamelike depressions on the sheet surfaces; can be eliminated by temper rolling, but sheet must be formed within a certain time after rolling.
Anisotropy (planar)	Exhibits different behavior in different planar directions; present in cold-rolled sheets because of preferred orientation or mechanical fibering; causes earing in drawing; can be reduced or eliminated by annealing but at lowered strength.
Anisotropy (normal)	Determines thinning behavior of sheet metals during stretching; important in deep-drawing operations.
Grain size	Determines surface roughness on stretched sheet metal; the coarser the grain, the rougher the appearance (orange peel); also affects material strength.
Residual stresses	Caused by nonuniform deformation during forming; causes part distortion when sectioned and can lead to stress-corrosion cracking; reduced or eliminated by stress relieving.
Springback	Caused by elastic recovery of the plastically deformed sheet after unloading; causes distortion of part and loss of dimensional accuracy; can be controlled by techniques such as overbending and bottoming of the punch.
Wrinkling	Caused by compressive stresses in the plane of the sheet; can be objectionable or can be useful in imparting stiffness to parts; can be controlled by proper tool and die design.
Quality of sheared edges	Depends on process used; edges can be rough, not square, and contain cracks, residual stresses, and a work-hardened layer, which are all detrimental to the formability of the sheet; quality can be improved by control of clearance, tool and die design, fine blanking, shaving, and lubrication.
Surface condition of sheet	Depends on rolling practice; important in sheet forming as it can cause tearing and poor surface quality; see also Section 13.3.

Formability

- Formability is the ability of sheet metal to undergo shape change without failure by necking or tearing
- Cupping (Swift or Ericson) tests give some idea of formability

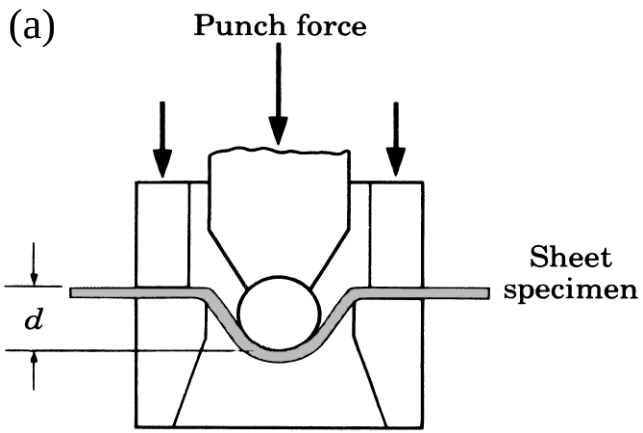

(a) Yield-point elongation in a sheet-metal specimen. (b) Lueder's bands in a low-carbon steel sheet. *Source*: Courtesy of Caterpillar Inc. (c) Stretcher strains at the bottom of a steel can for household products.

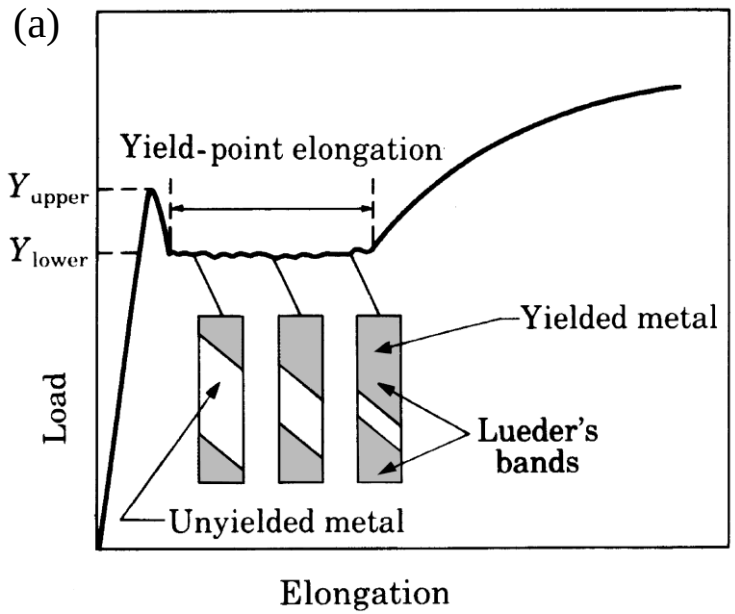

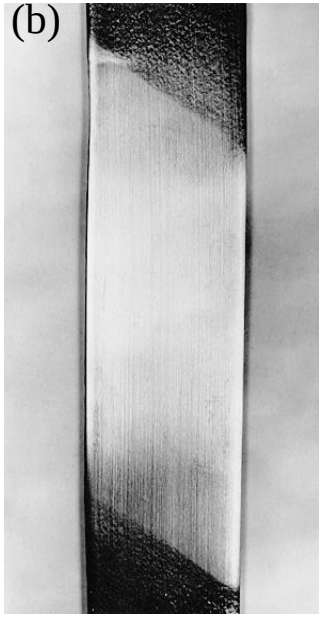

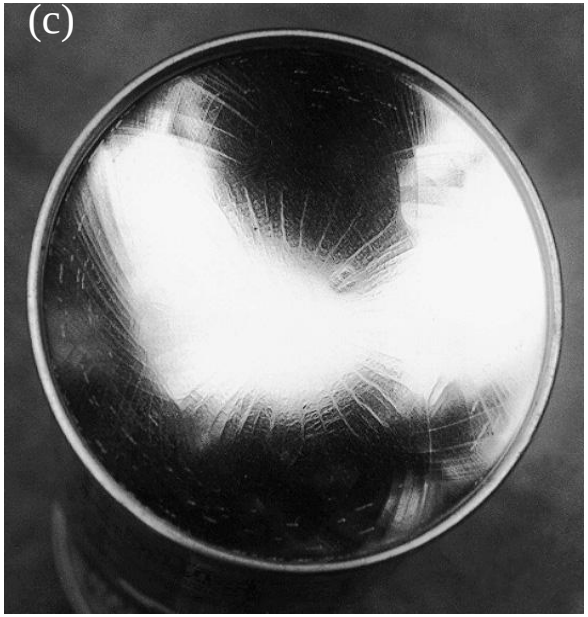

Forming-Limit Diagrams (FLD)

- Sheet metal is marked with small circles, stretched over a punch, and deformation is observed in failure areas
- FLD shows boundary between safe and failure zones

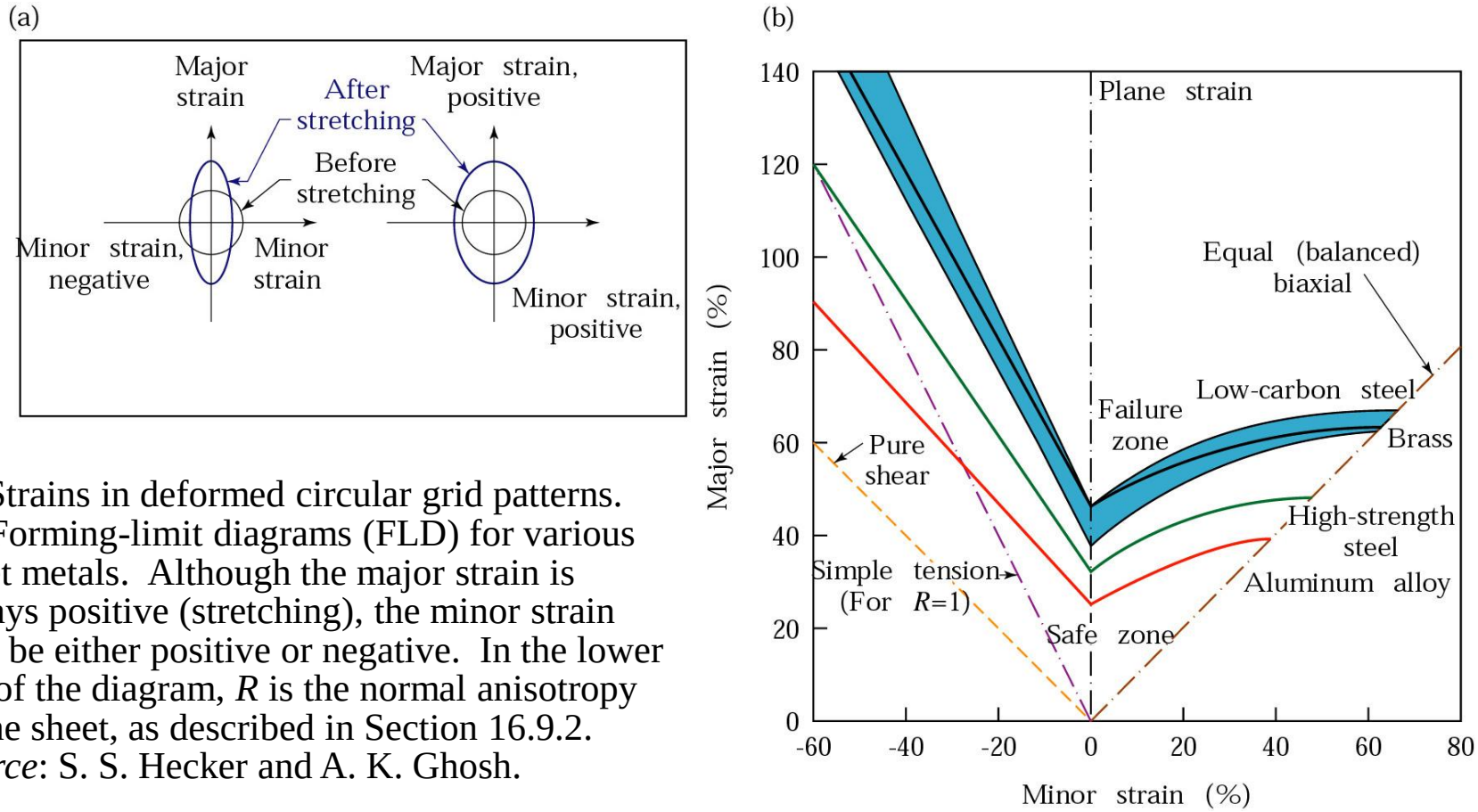

(a) Strains in deformed circular grid patterns. (b) Forming-limit diagrams (FLD) for various sheet metals. Although the major strain is always positive (stretching), the minor strain may be either positive or negative. In the lower left of the diagram, *R* is the normal anisotropy of the sheet, as described in Section 16.9.2. *Source*: S. S. Hecker and A. K. Ghosh.

Shearing

- A blank is a properly sized piece of sheet metal removed from a much larger sheet or coil by shearing
- Shearing is cutting by subjecting a workpiece to shear stresses
- Shearing starts with small cracks at points A, B, C, D which eventually grow and meet
- Rough fracture surfaces and smooth burnished surfaces result
- Shear angles or beveled edges often used on shearing dies

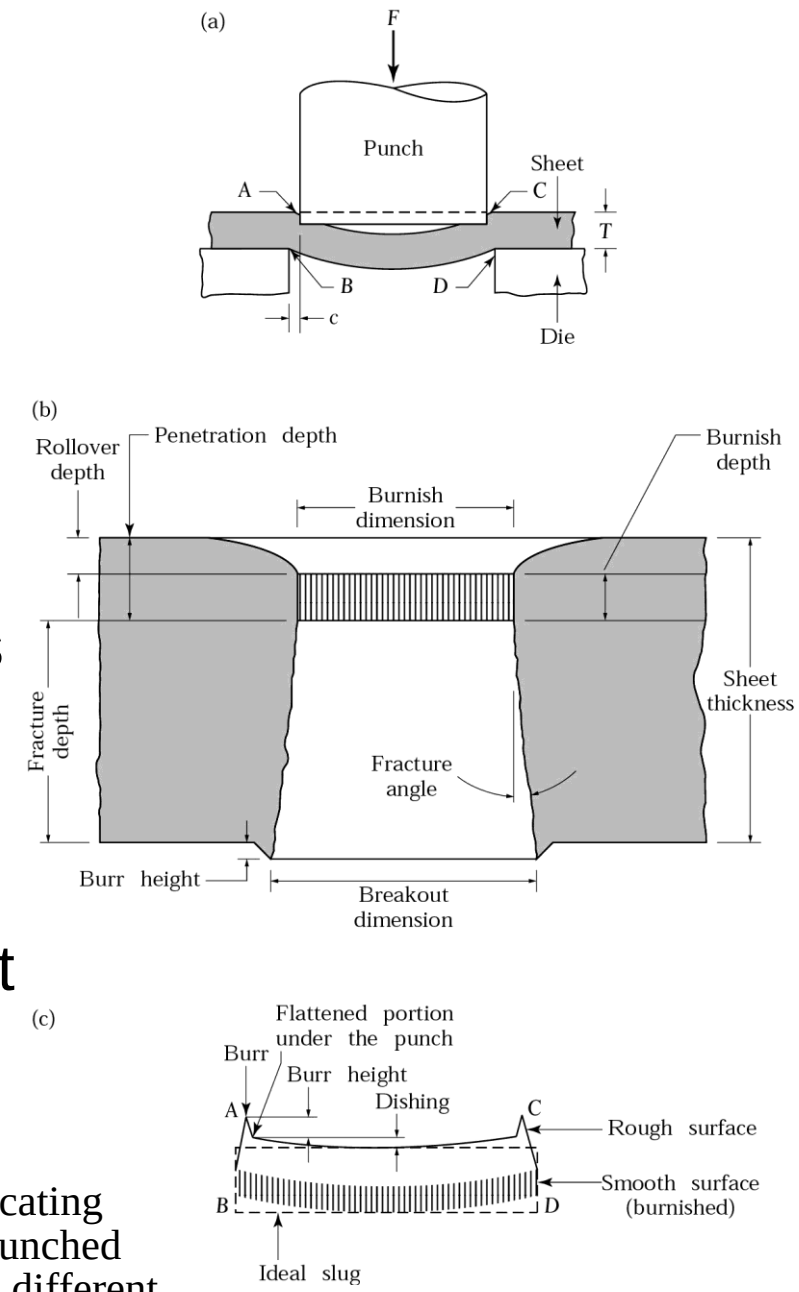

(a) Schematic illustration of shearing with a punch and die, indicating some of the process variables. Characteristic features of (b) a punched hole and (c) the slug. Note that the scales of the two figures are different.

Shearing Parameters

- Clearance, c, between the punch and die typically between 2% and 10% of sheet metal thickness
- As clearance increases, sheared edge becomes rougher and zone of deformation becomes larger – clearances are smaller for softer metals, thinner sheets, or larger holes
- Ratio of burnished to rough edges increases with: increasing ductility, decreasing clearance and thickness
- Faster punch speeds cause narrower sheared zones and less burr formation
- Burr height increases with increasing clearance, ductility, or dull tools
- Maximum Punch Force, $F = 0.7\ T\ L\ (UTS)$

  (product of thickness, sheared edge perimeter, and UTS)

Shearing Operations

- Punching – sheared slug is discarded
- Blanking – slug is workpiece, surrounding area discarded
- Die cutting includes perforating (many holes), parting (separating into multiple pieces), notching (removing pieces from the edges), and lancing (leaving a tab)
- Fine blanking with 1% clearances produces very smooth and squared off edges

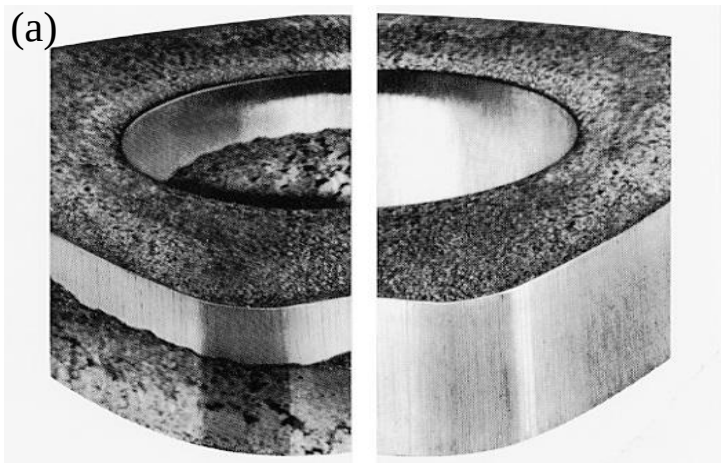

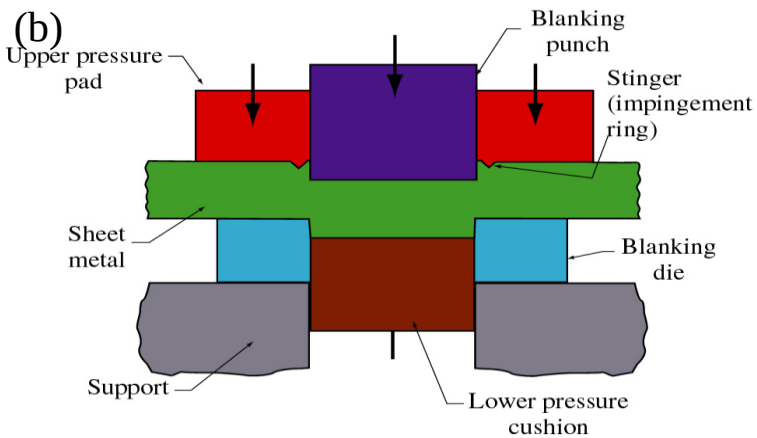

(a) Comparison of sheared edges produced by conventional (left) and by fine-blanking (right) techniques.
(b) Schematic illustration of one setup for fine blanking. *Source*: Feintool U.S. Operations.

Shearing Operations

- Slitting – cutting off with 2 circular blades (can opener)
- Steel rules – a die for shearing soft metals, paper, leather, and rubber into specific shapes (cookie cutter)
- Nibbling – reciprocating die for successive, overlapping holes that shears intricate, flexible shapes
- Shaving – trims excess material to clean sheared edges
- Compound and progressive dies perform several operations

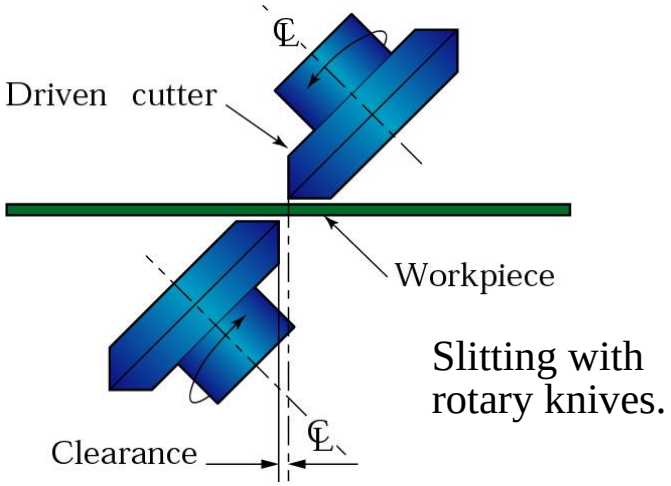

Slitting with rotary knives.

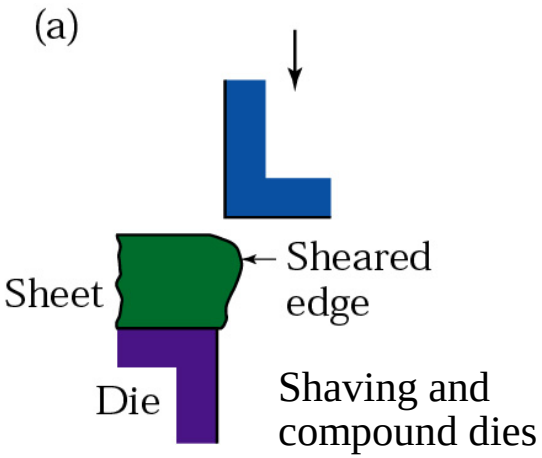

Shaving and compound dies

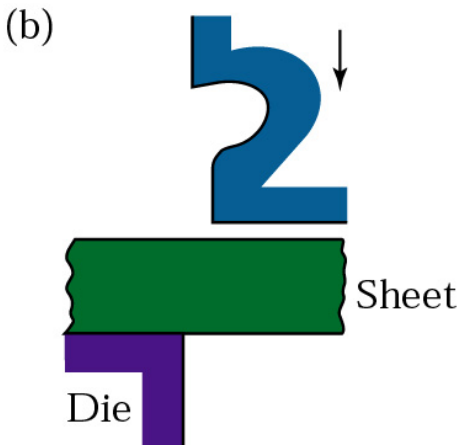

Other Methods of Cutting Sheet Metal

- Band saw – metal material removal process that produces chips as in other machining
- Flame cutting – especially for thick steel plates, as in shipbuilding
- Laser-beam cutting – newer process used with computer controlled equipment
- Plasma cutting – high energy plasma formed by electric arc between tool and work material
- Friction sawing – disk or blade that rubs against sheet or plate at high speeds
- Water-jet cutting – for metallic and non-metallic workpieces

Laser Cutting

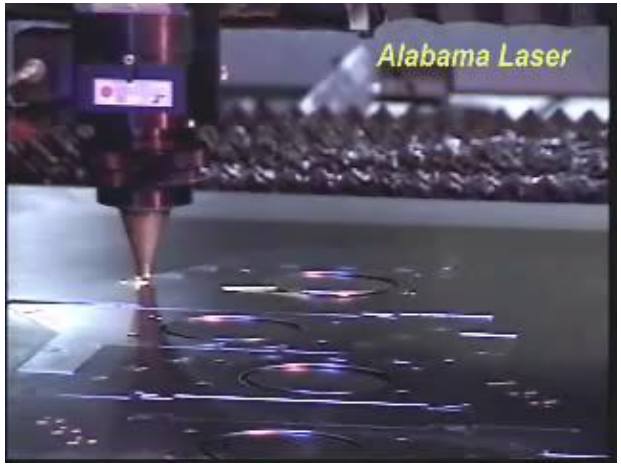

Mechanical Stamp Press

Sequential Process Steps

Progressive Die Work

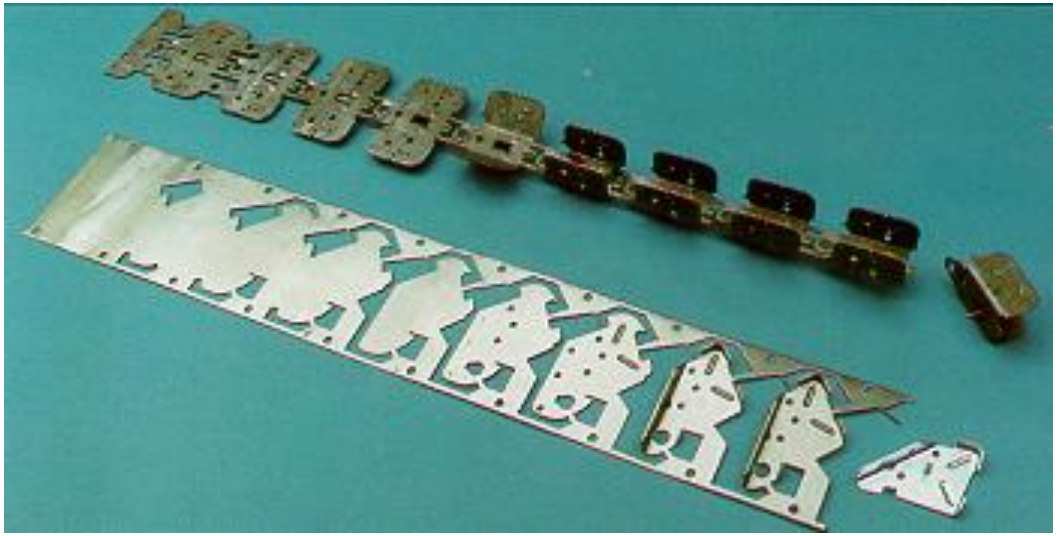

Cut-Off Die

Cut-Off Die

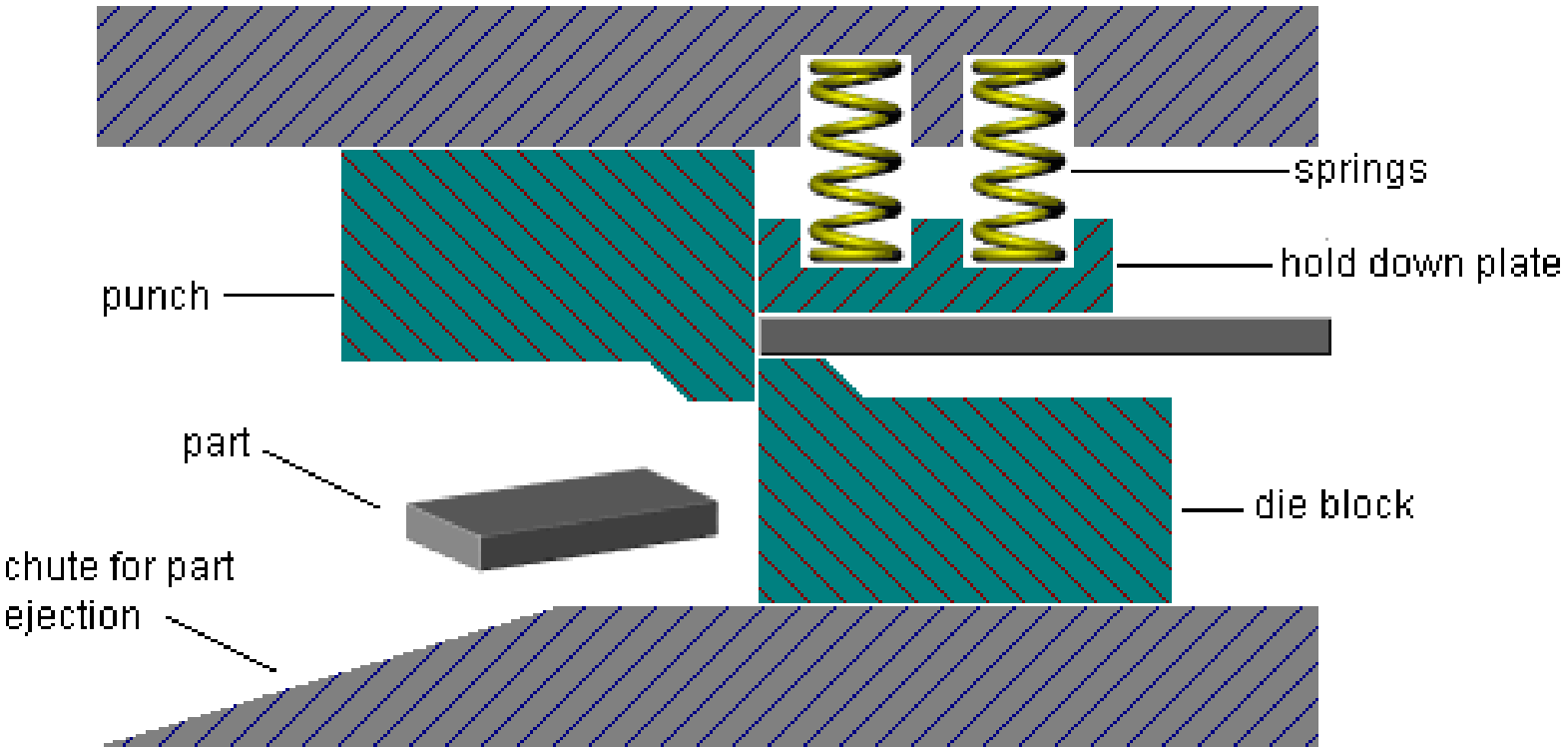

Cut Off Operation

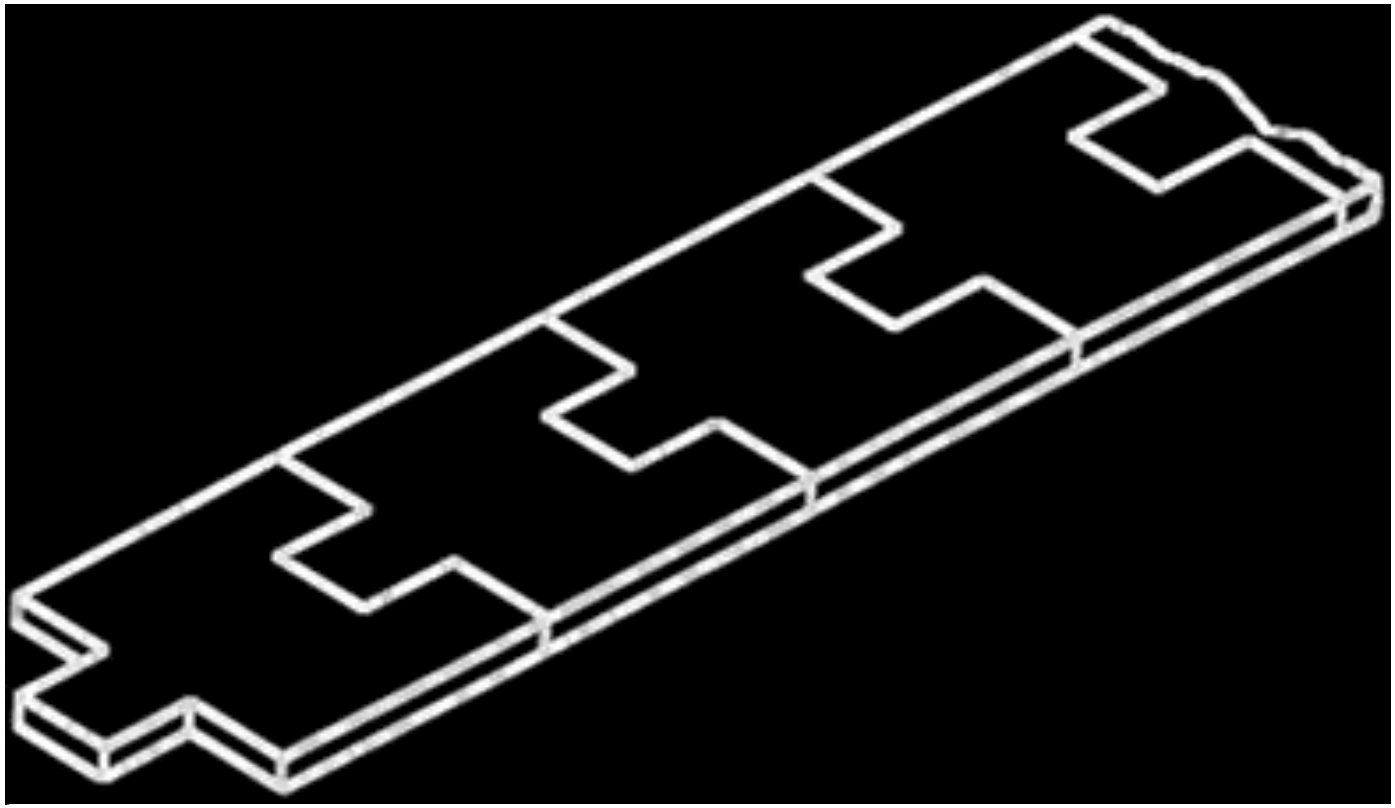

- **Design parts with straight parallel edges and “jig-saw” ends - minimizes scrap and can be produced on simplest cut-off die**

Part-Off Die

Part-off Die

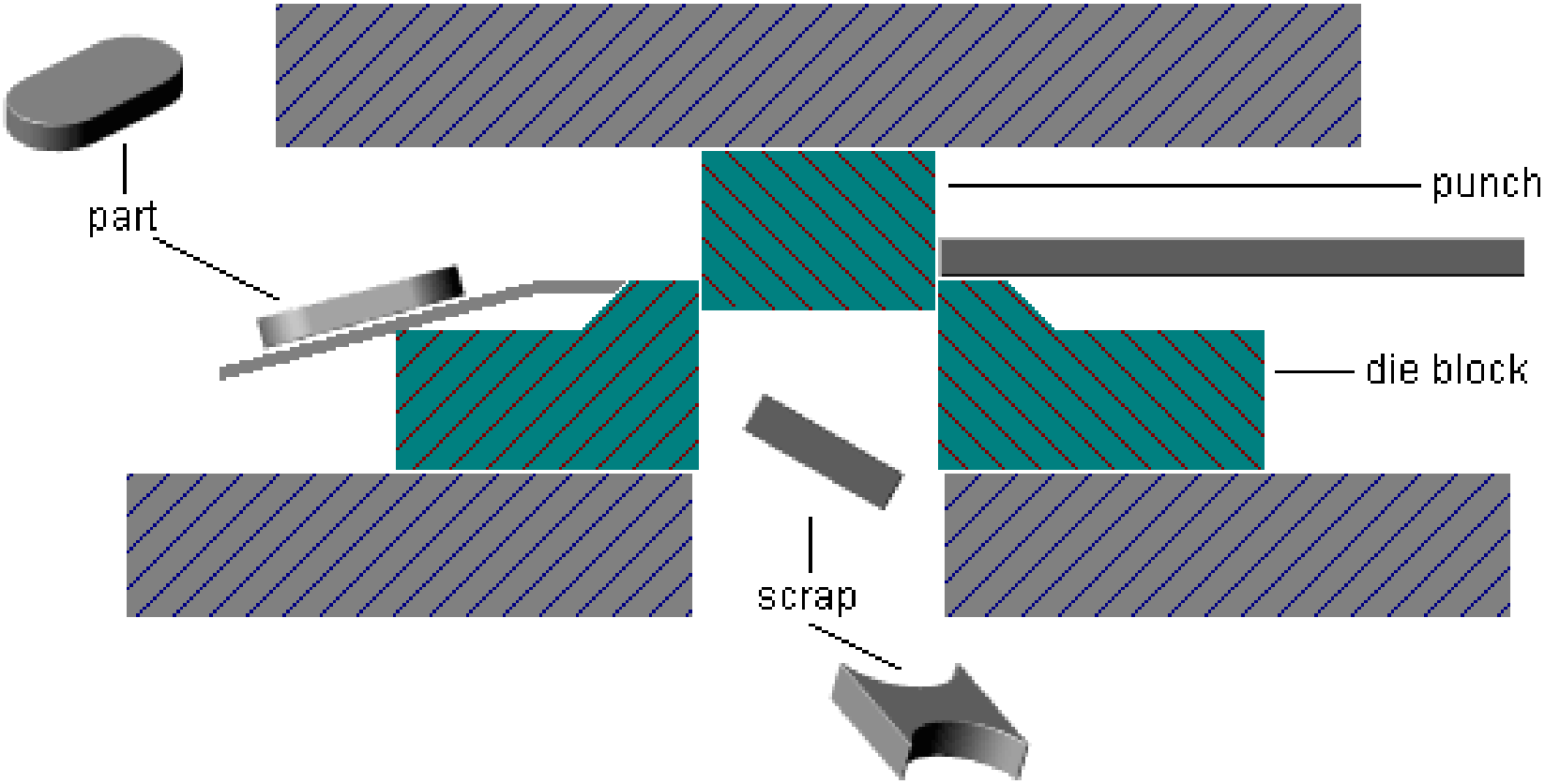

Part Off Operation

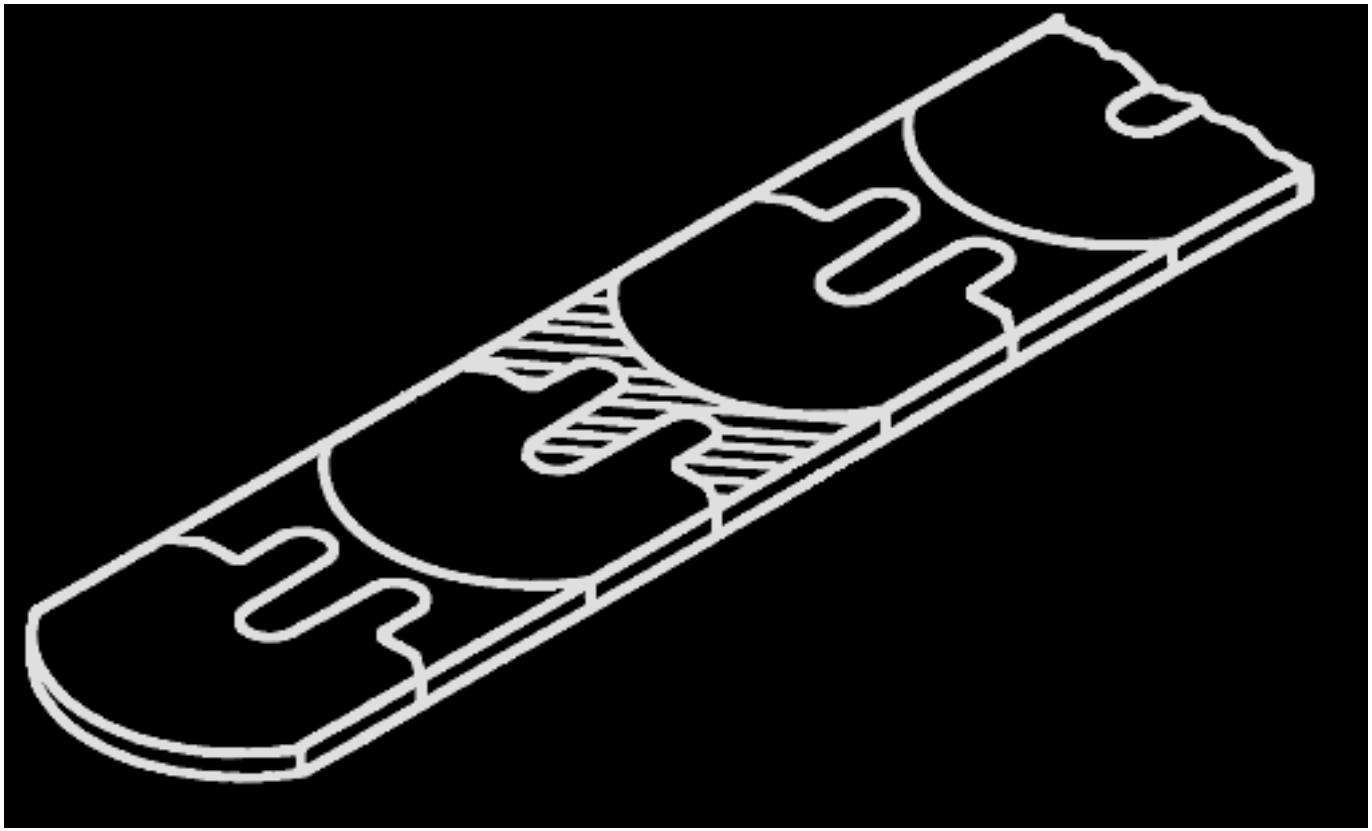

- **Design parts with straight parallel edges - reduces edge scrap and requires simpler part-off die**

Blanking Die

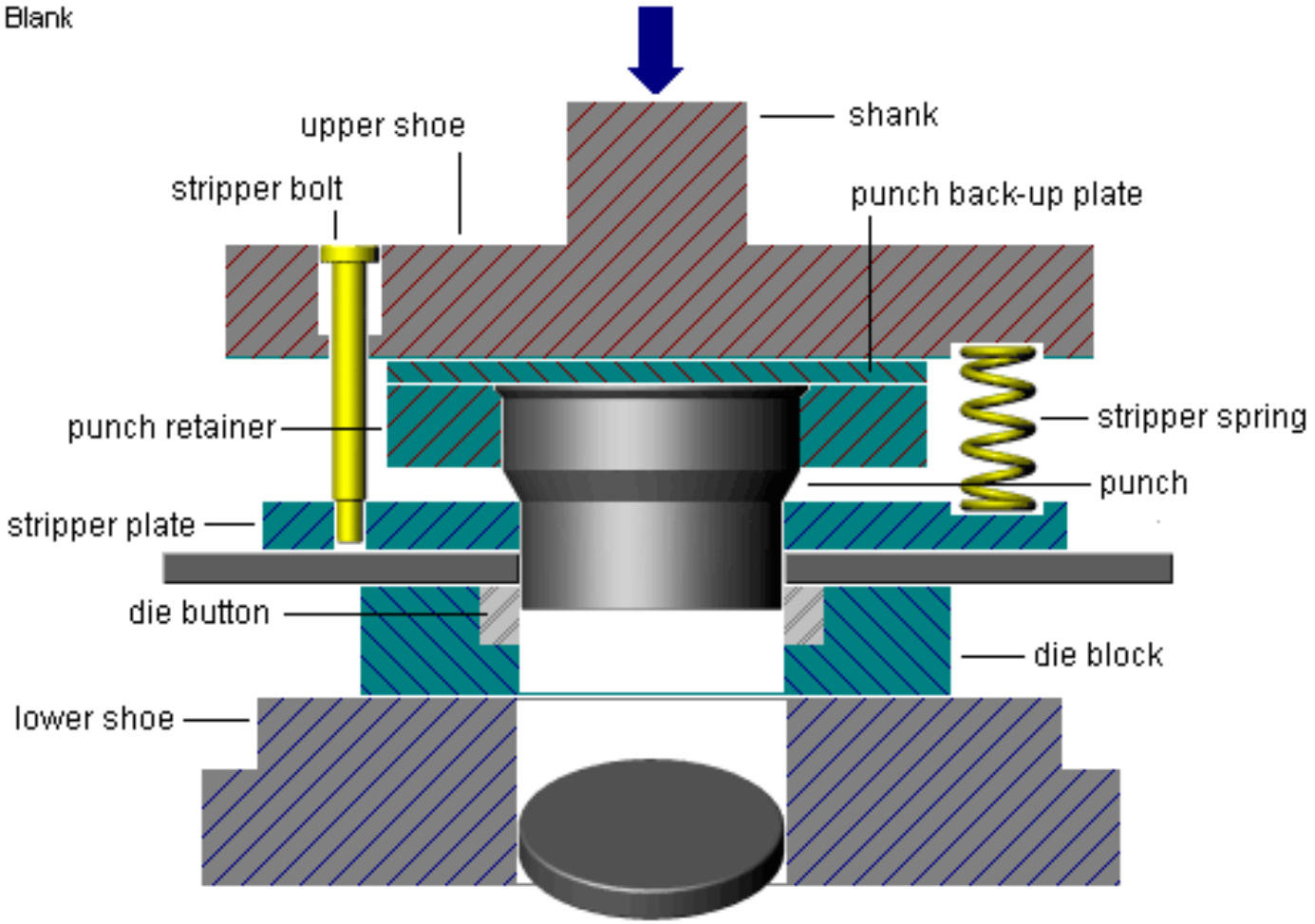

Hole Punching Die

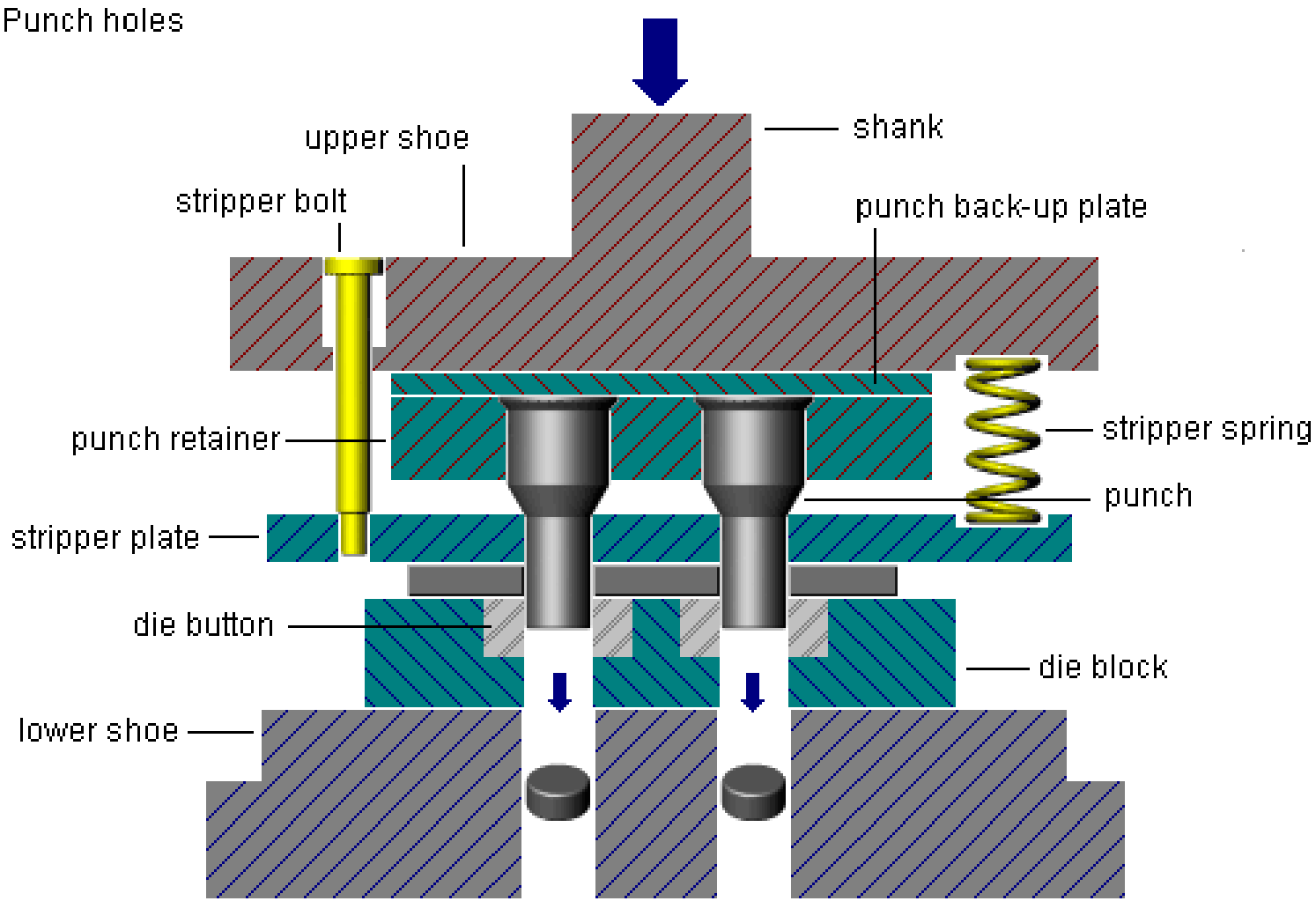

Blank and Punch Die

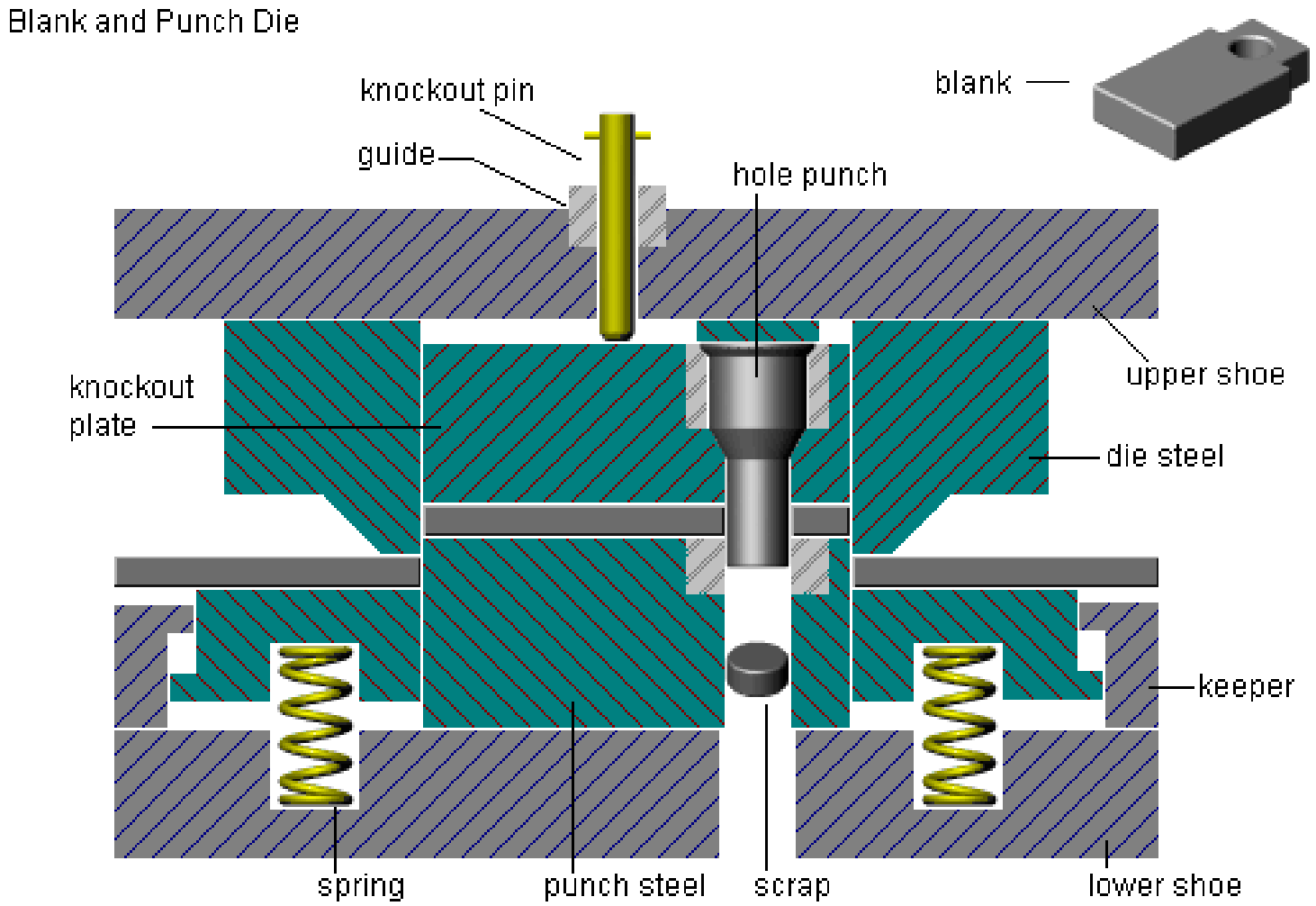

Multi-stage Stamping

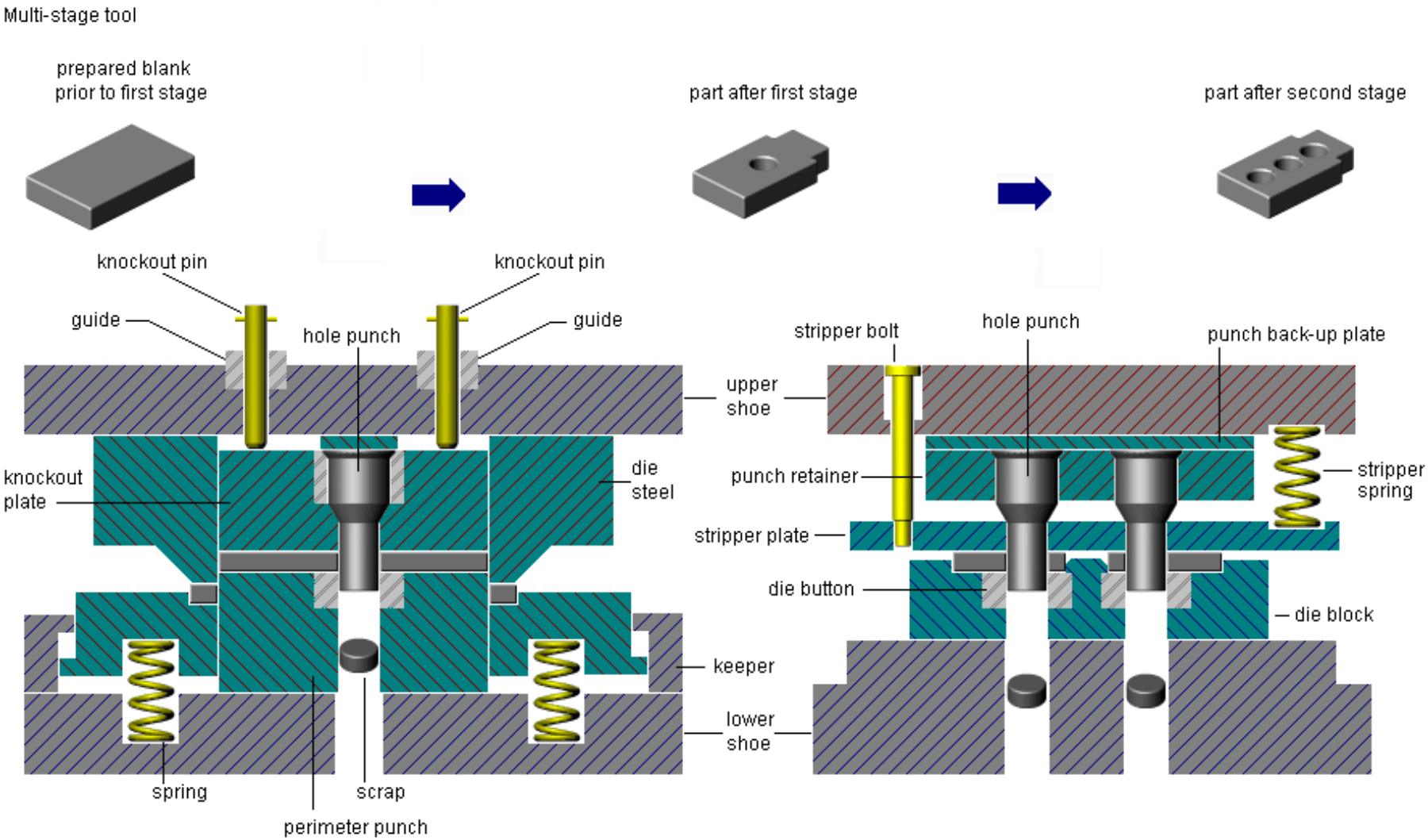

first stage - compound die

second stage - hole punching

Progressive Die

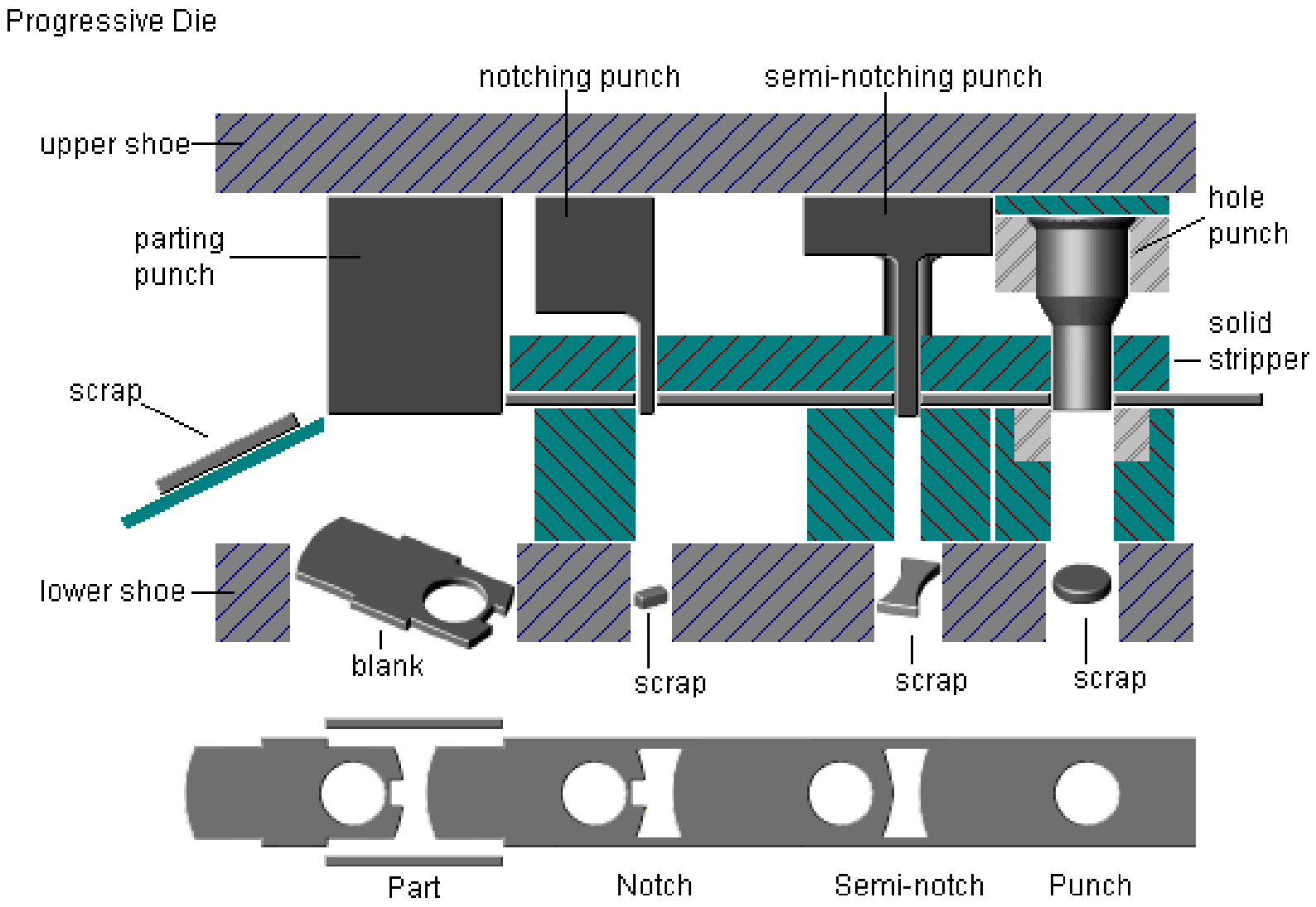

Processing Limits –minimum hole diameters

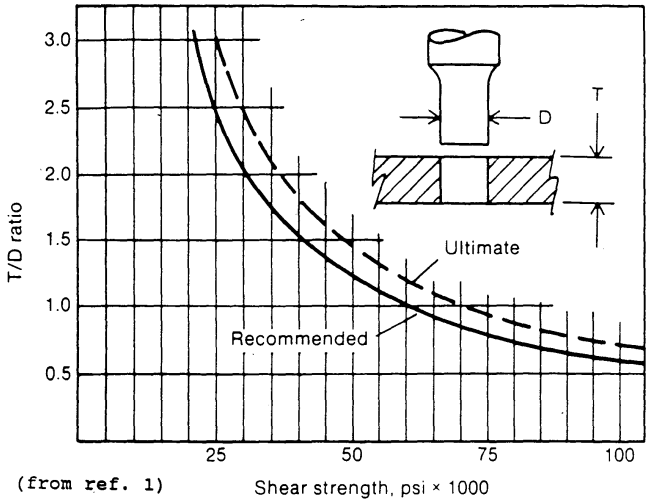

(from ref. 1)

MINIMUM RECOMMENDED HOLE DIAMETER
RELATIVE TO MATERIAL THICKNESS, T

ALUM - 6061 T6	0.50 T
ALUM - 2024 T4	0.67 T
BRASS - 1/2 HARD	0.75 T
STEEL - C1018	1.00 T
ST STEEL - 304,316	1.25 T

Critical Dimensions in Design of Sheet Metal Blank

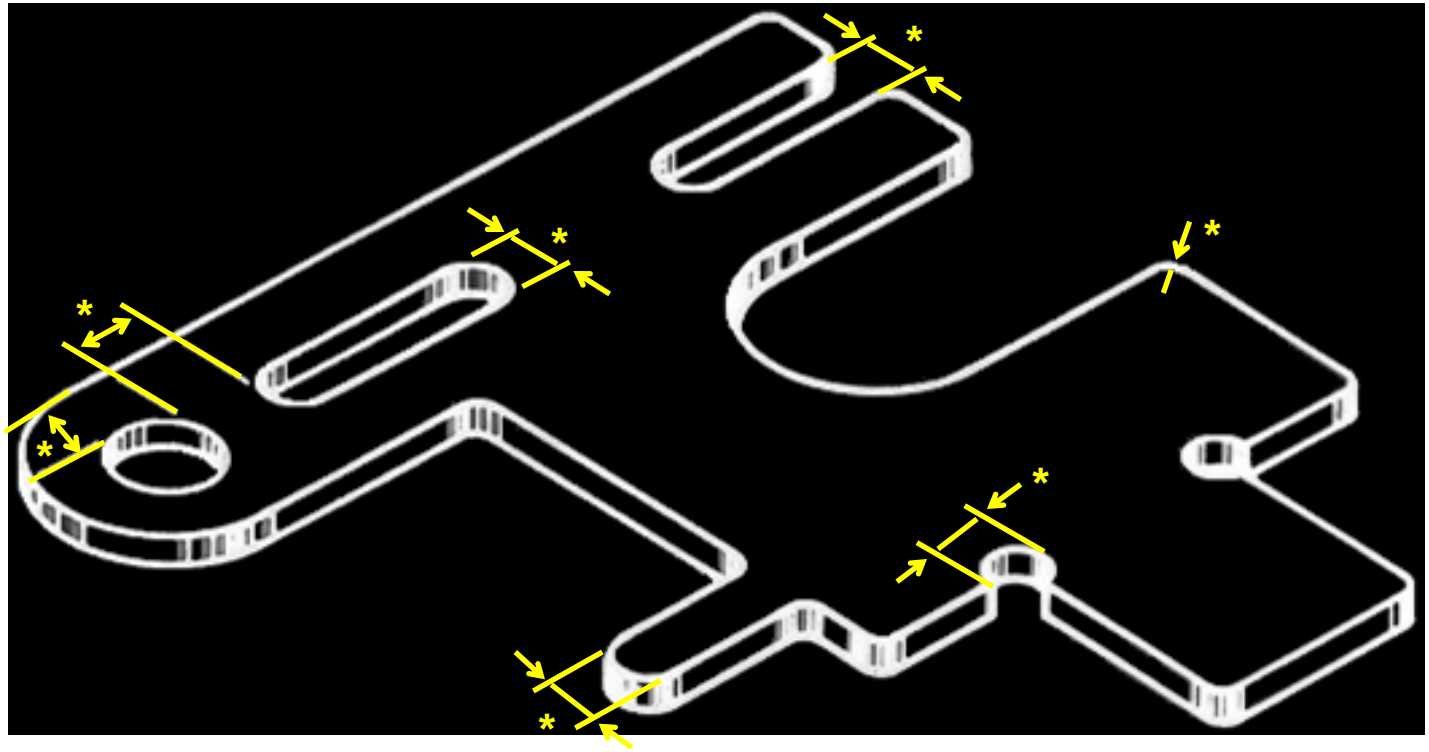

*** All dimensions > 2 x gage thickness**

Feature Position Limits

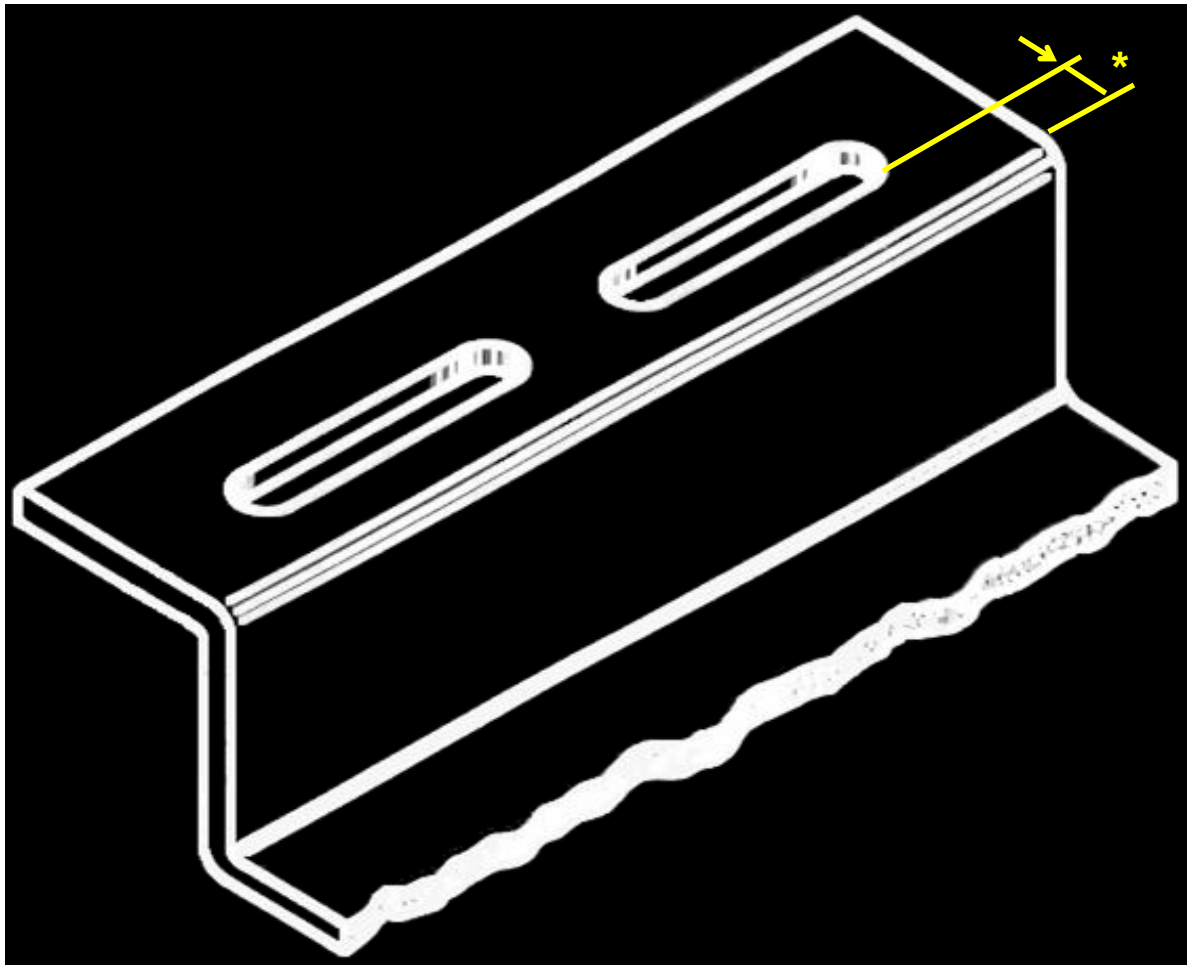

*** Dimension > 4 x gage thickness**

Reducing Scrap

- Scrap metal can be as high as 30%
- Computer aided design and planning can minimize scrap
- Tailor-welded blanks are multiple pieces of flat sheet butt-welded together and simultaneously stamped

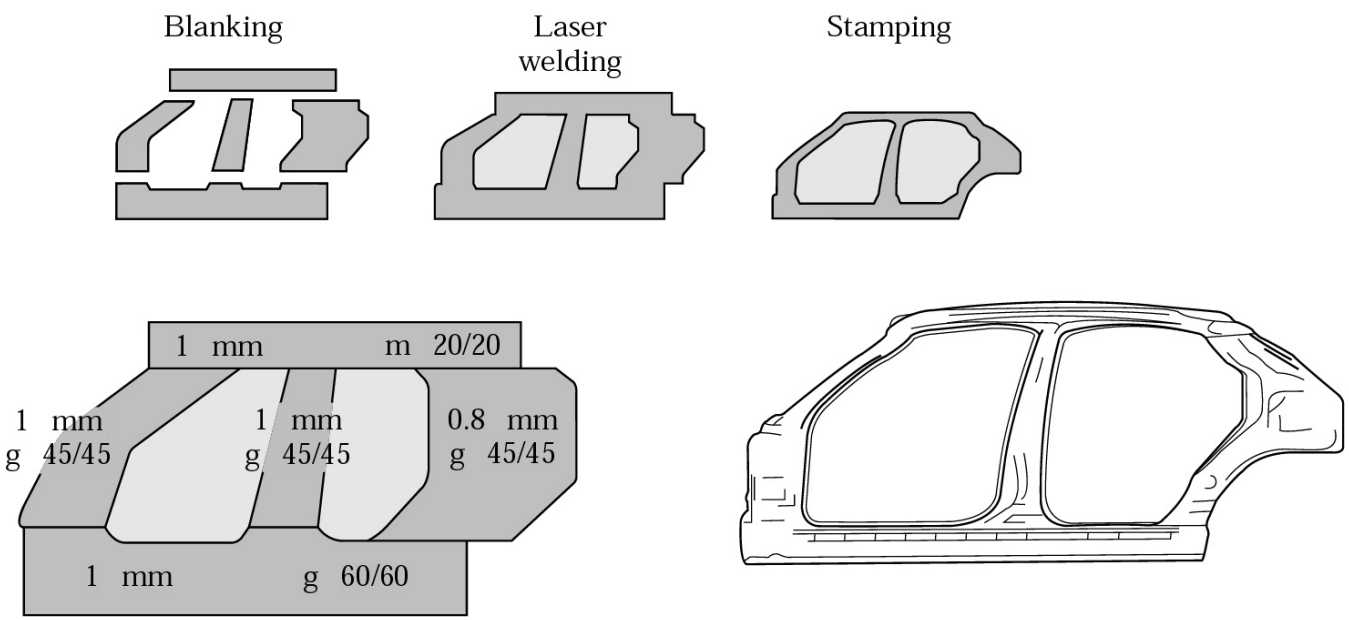

Production of an outer side panel of a car body, by laser butt-welding and stamping. *Source*: After M. Geiger and T. Nakagawa.

Legend

g 60/60 (45/45) Hot galvanized alloy steel sheet. Zinc amount: 60/60 (45/45) g/m^2.

m20/20 Double-layered iron-zinc alloy electroplated steel sheet. Zinc amount 20/20 g/m^2.

Reducing Waste Material

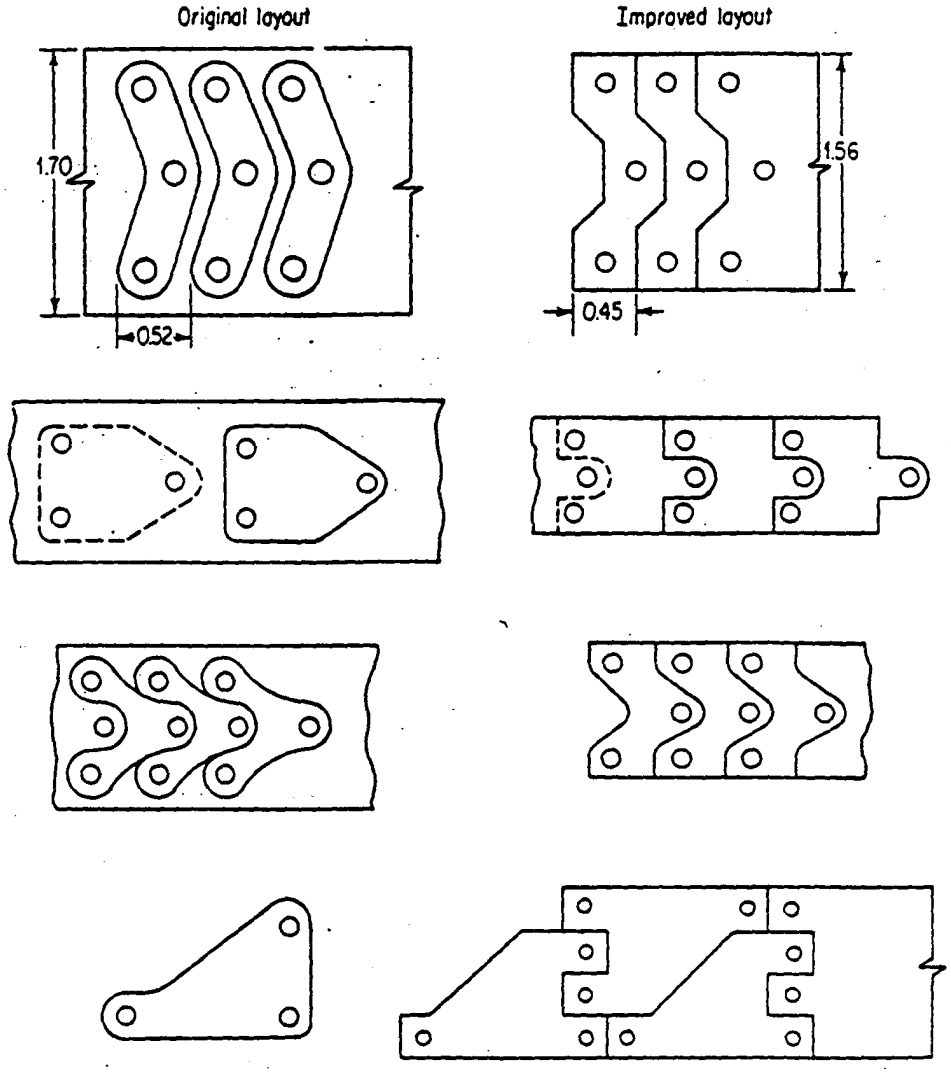

Basic examples of stock-layout improvement for economical blanking with minimum scrap.

CNC Turret Press

Programmable machines for punching sheet metal using a turret of standard tools and corresponding dies

CNC Turret Press

Turret Presswork

Turret of standard tools

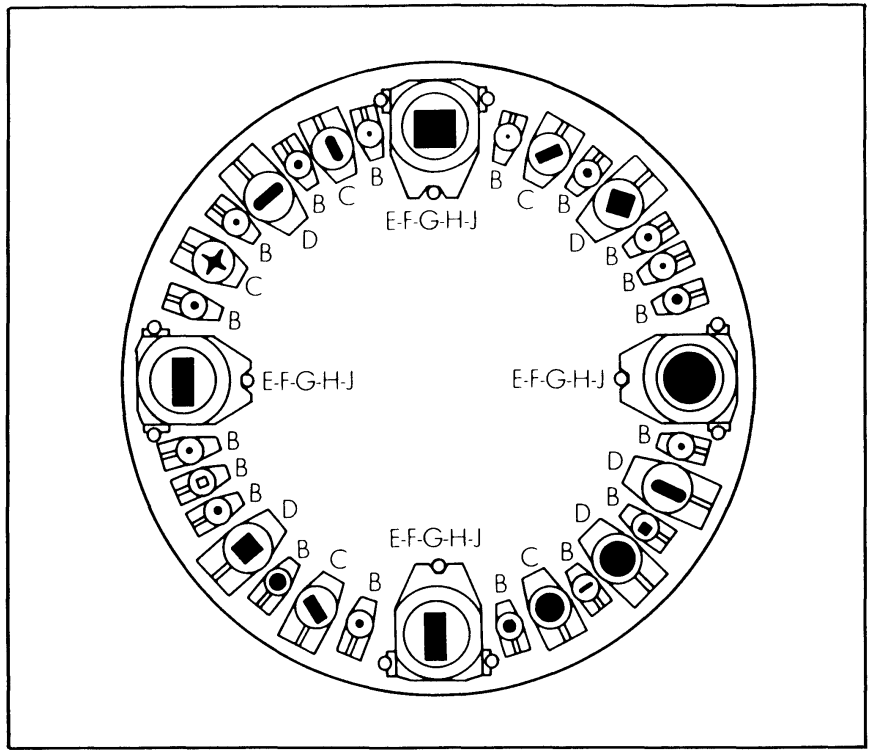

A 32-station turret designed to hold various punch and die sizes in certain locations. (*Wiedemann Div., Warner & Swasey Co.*)

At least one blow per hole

Long profiles require multiple blows

Laser or plasma cutting often added to reduce processing times

Tools for corner radii

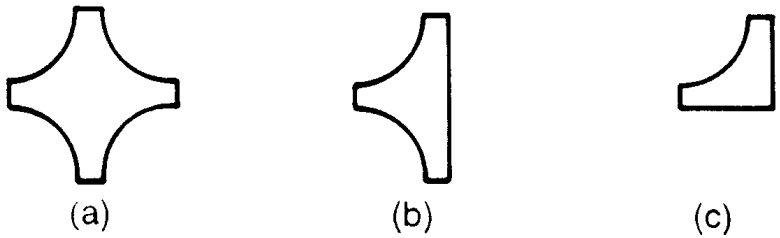

Turret Press Part Features

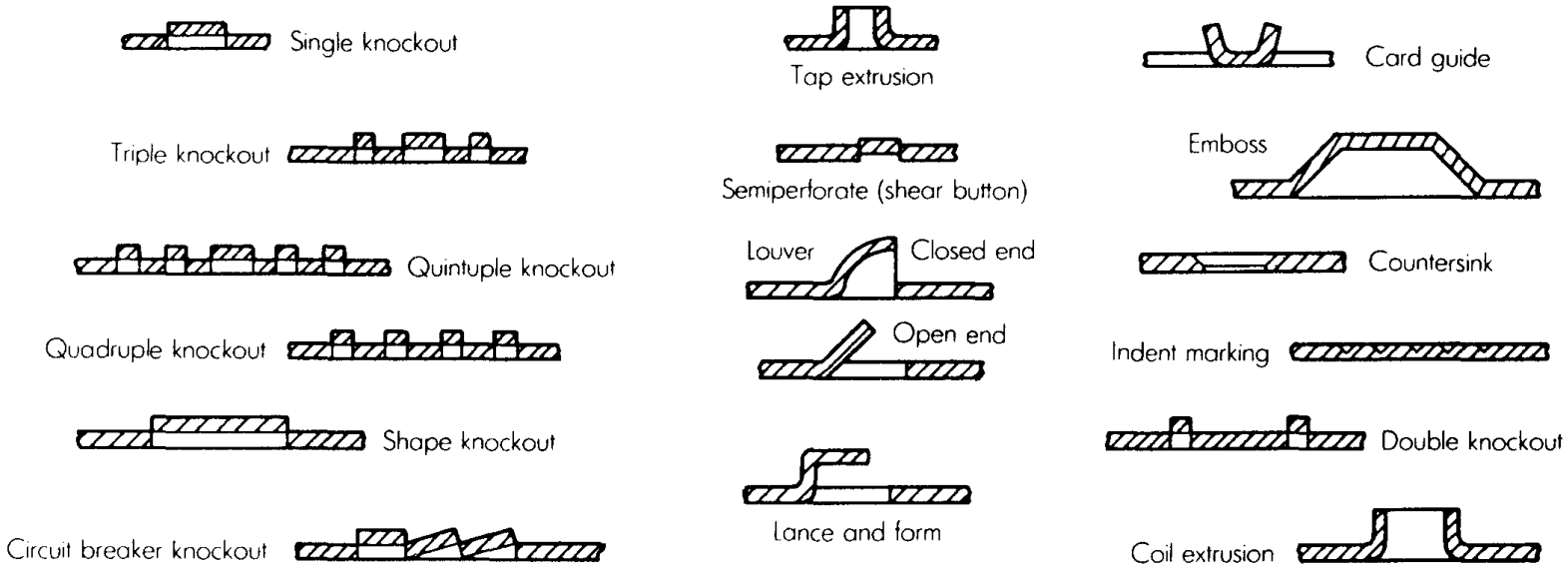

Only possible in the upwards direction

Turret Press Part Layout

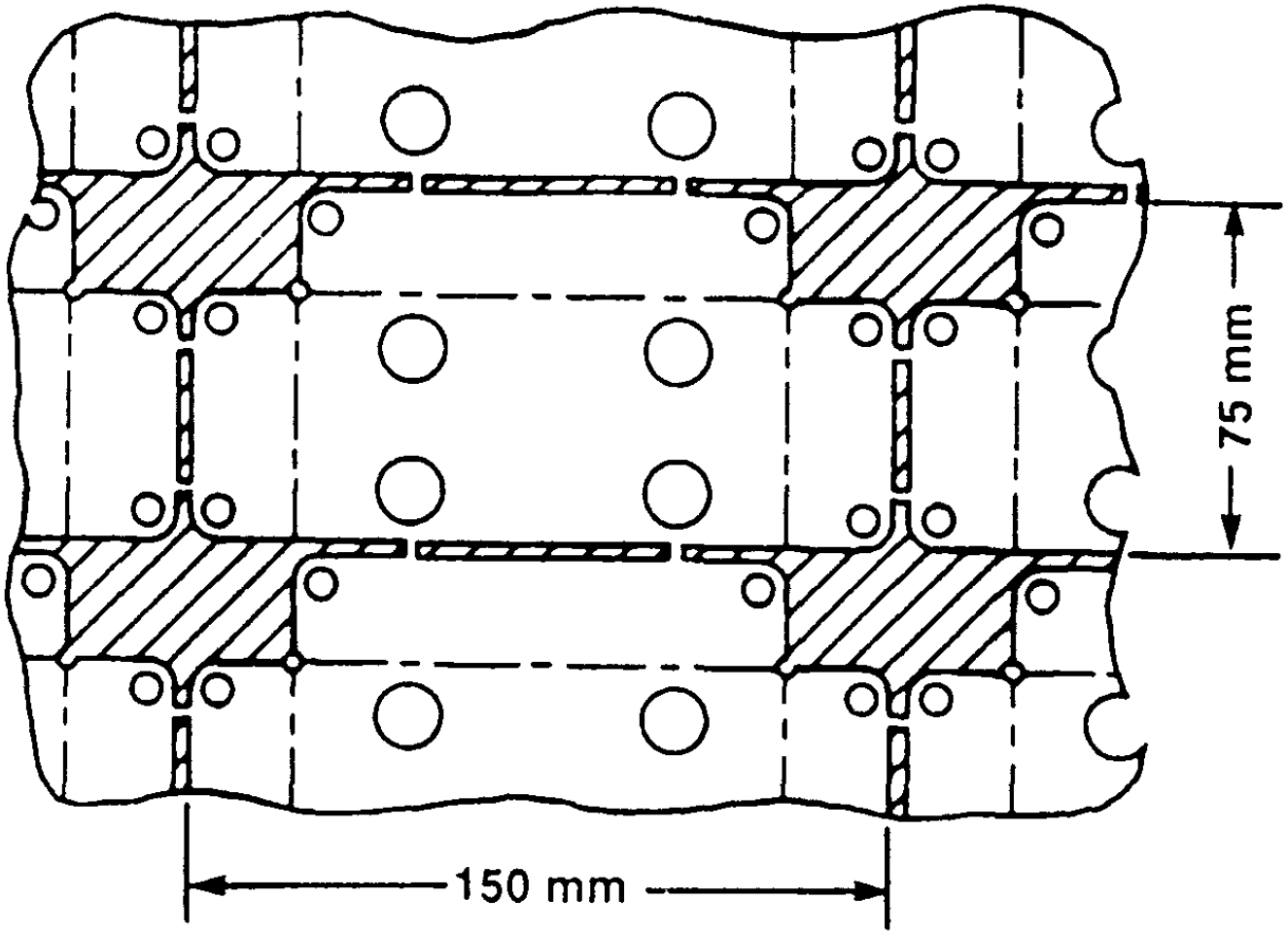

Basic Die Bending Operations

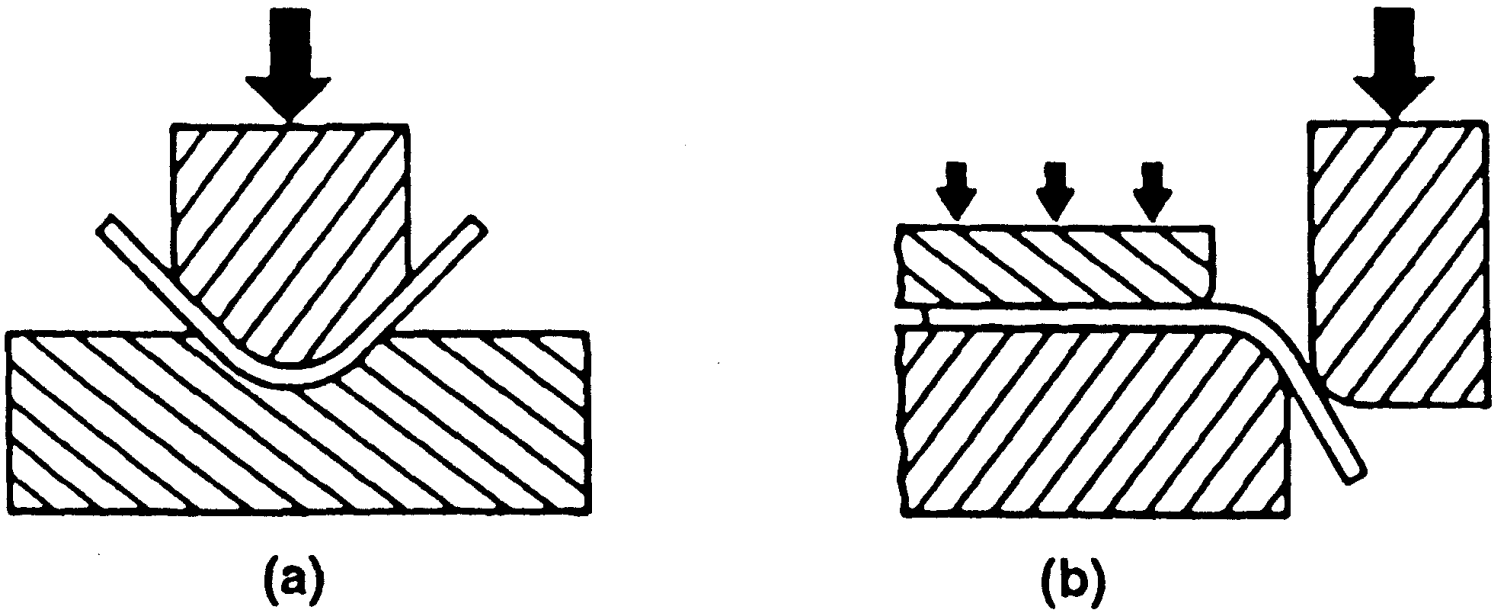

FIG. 9.14 Basic bending tools (a) v-die. (b) Wiper die.

Basic Die Bending Operations

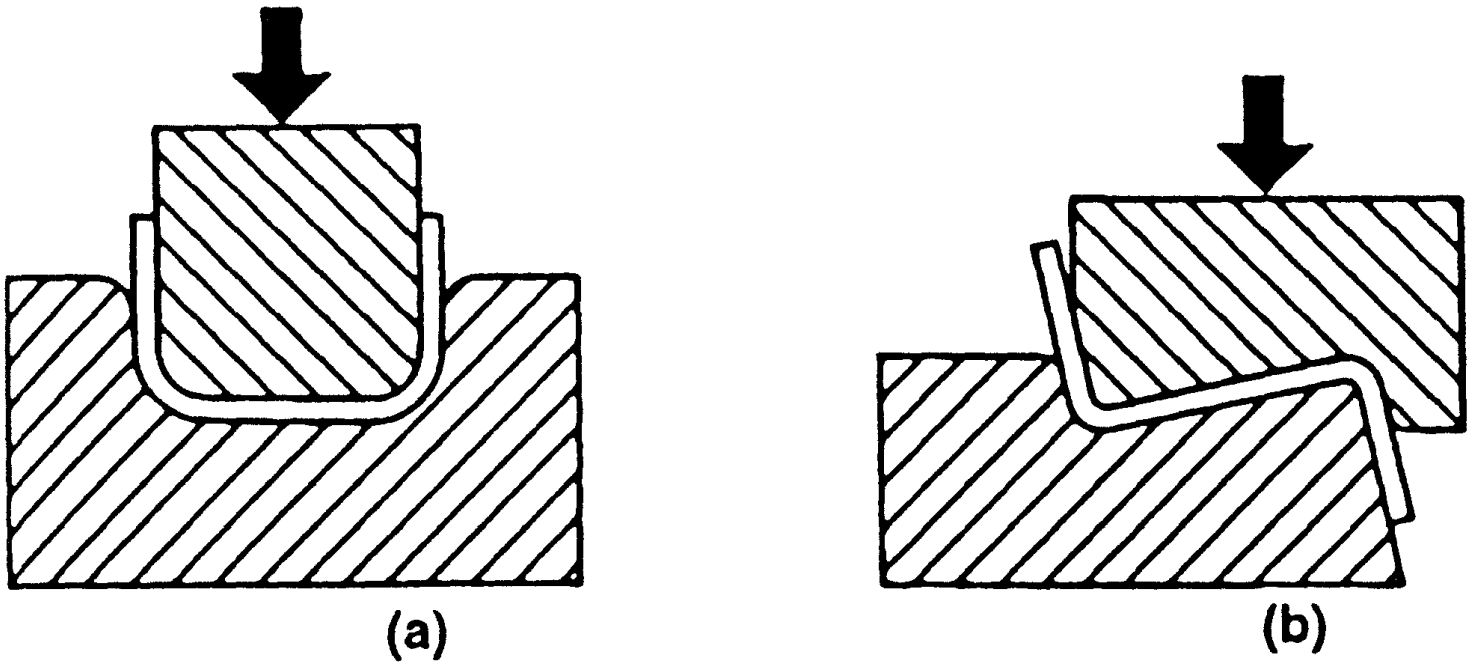

FIG. 9.15 Basic methods of producing multiple bends. (a) u-die. (b) z-die

Springback and Bending Forces

- Springback is the elastic recovery following plastic deformation during bending

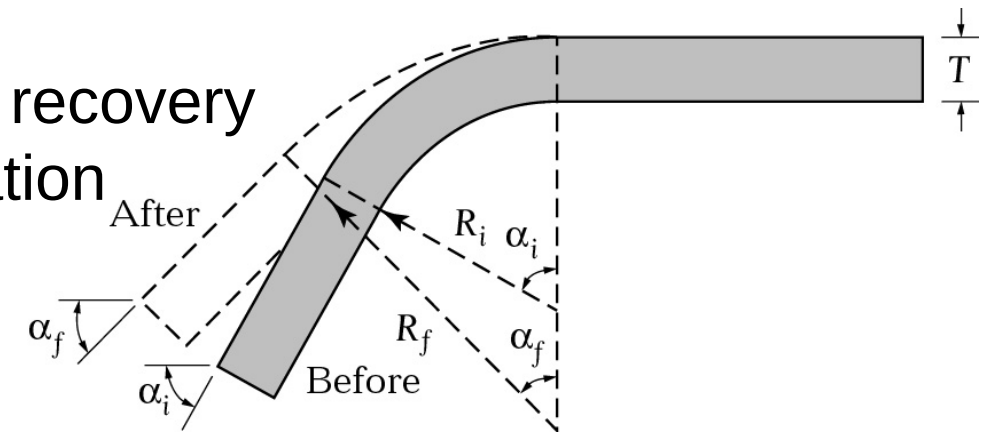

$$\frac{R_i}{R_f} = 4\left(\frac{R_i Y}{ET}\right)^3 - 3\left(\frac{R_i Y}{ET}\right) + 1$$

- Bending force is a function of material strength, length of bend (L), sheet thickness (T) and size of die opening (W)

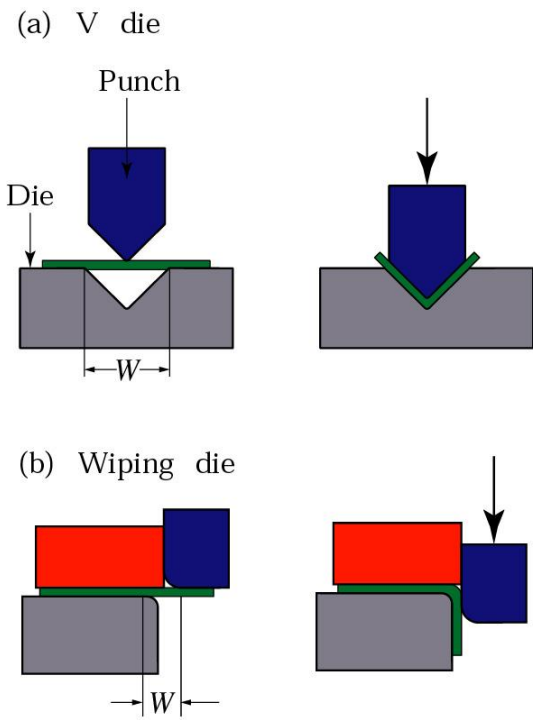

$$P = \frac{kYLT^2}{W}$$

$$P = \frac{(UTS)LT^2}{W}$$

For a V-die

Springback Reduction

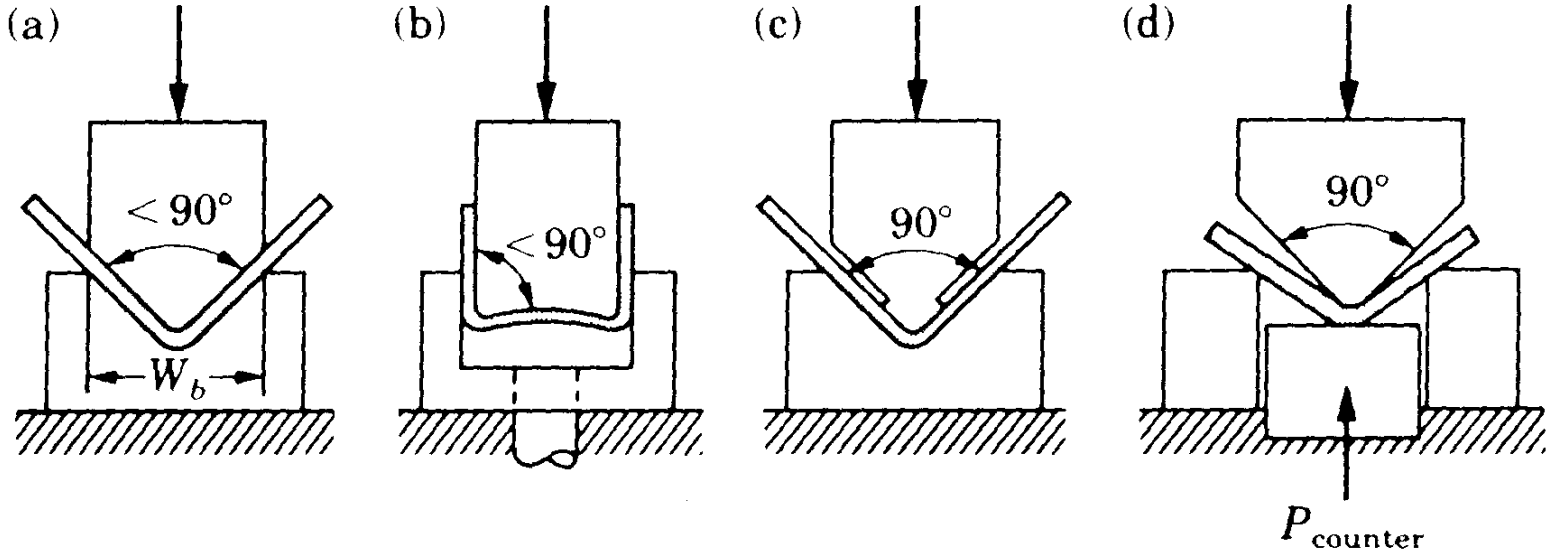

Bending Sheet Metal

- In bending, outer fibers are in tension while inner fibers are in compression
- Bend allowance is the length of the neutral axis in the bend, $L_b = \alpha\,(R+kT)$
- k is a constant that ranges from 0.33 (for R<2T) to 0.5 (for R>2T)
- Engineering strain during bending:

$$e = \frac{1}{\left(2R/T\right)+1}$$

- As R/T decreases, the tensile strain at outer fiber increases and material eventually cracks

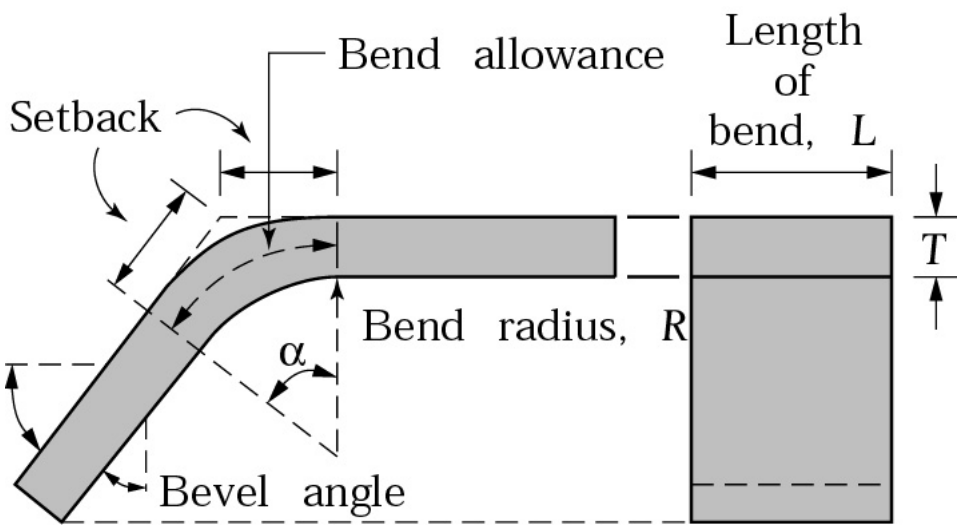

Bendability and Minimum Bend Radius

- A 3T minimum bend radius means the smallest radius the sheet can be bent to without cracking is 3 times thickness
- r is the tensile reduction of area of the sheet metal

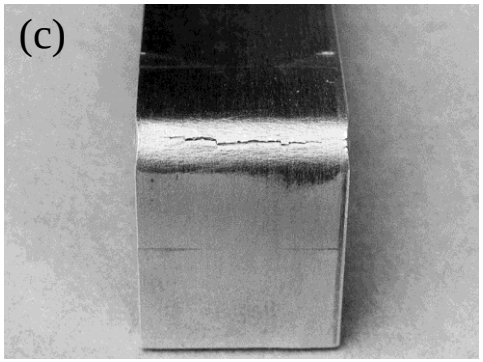

(c) Cracks on the outer surface of an aluminum strip bent to an angle of 90o. Note the narrowing of the top surface due to the Poisson effect.

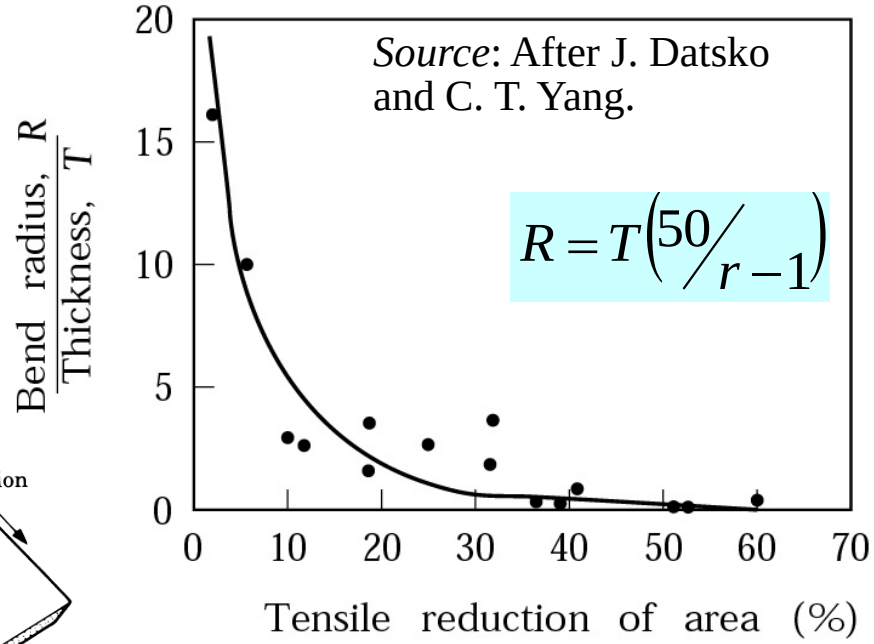

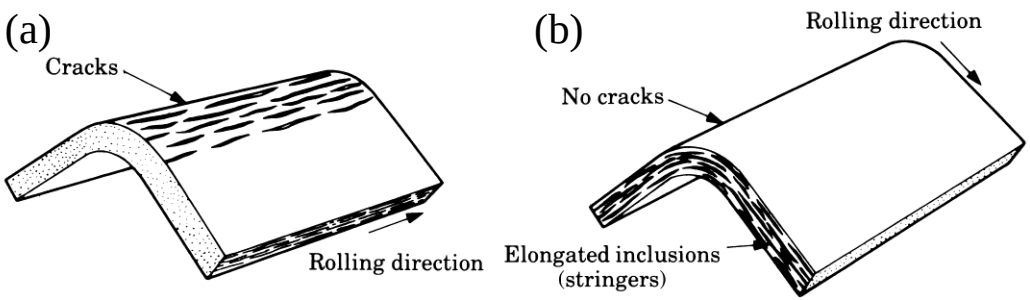

(a) and (b) The effect of elongated inclusions (stringers) on cracking, as a function of the direction of bending with respect to the original rolling direction of the sheet.

Press Brake Forming

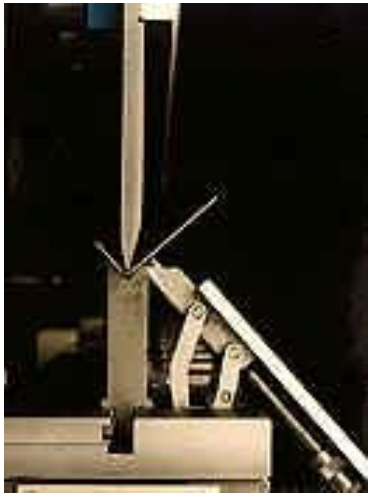

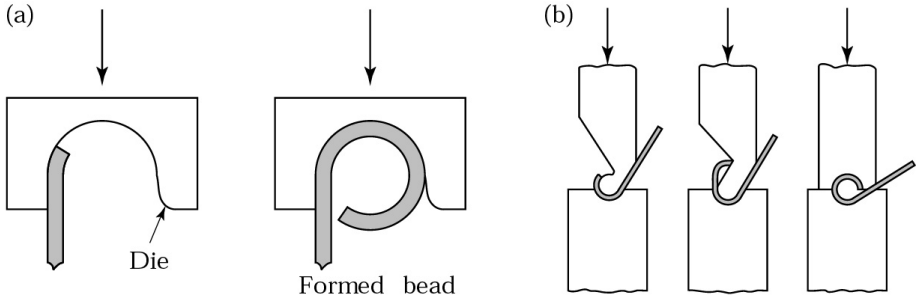

Press Brake Forming

Other Bending Operations

- Roll-bending – bending plates with a set of rolls
- Beading – bending the periphery of sheet metal into a cavity of a die to improve appearance and eliminate exposed edges
- Flanging – bending edges of sheet metal to 90 degrees
- Dimpling – punching a hole, followed immediately by flanging the edges
- Hemming – folding the edge of a sheet over itself
- Seaming – joining 2 edges of sheet metal by hemming
- Roll Forming – Multiple rolls to form linear products similar to extrusion

Roll Forming

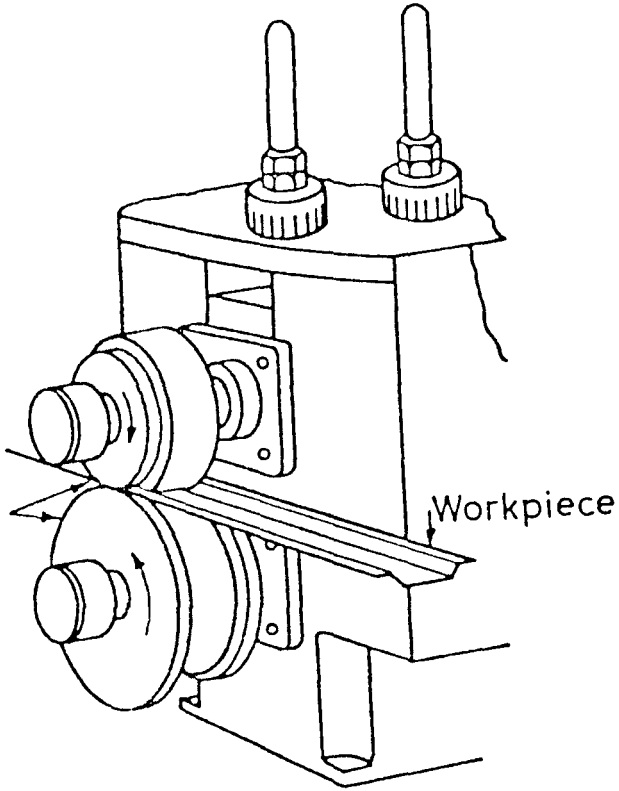

Multi-stage rolling process for producing elongated sectional products from sheet metal

Typical products are rain gutters and down spouts

Competes with extrusion for some products

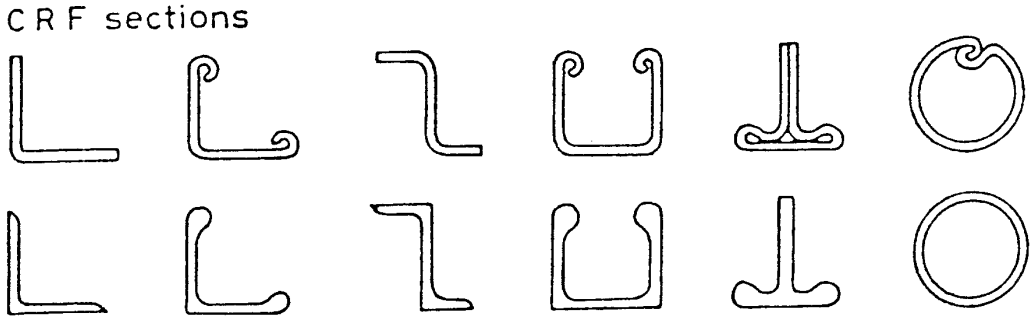

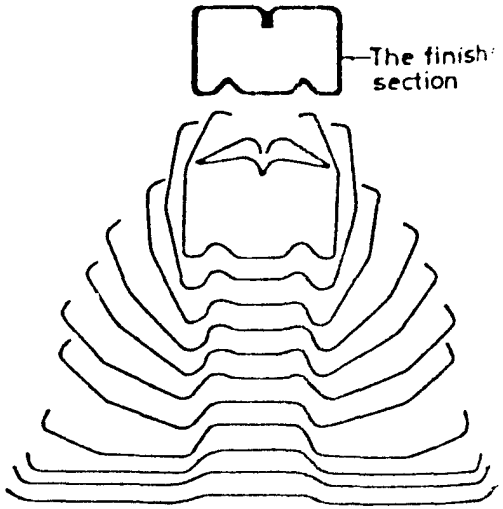

Fig. 4. 'Flower' method of roll design

Deep Drawing Die

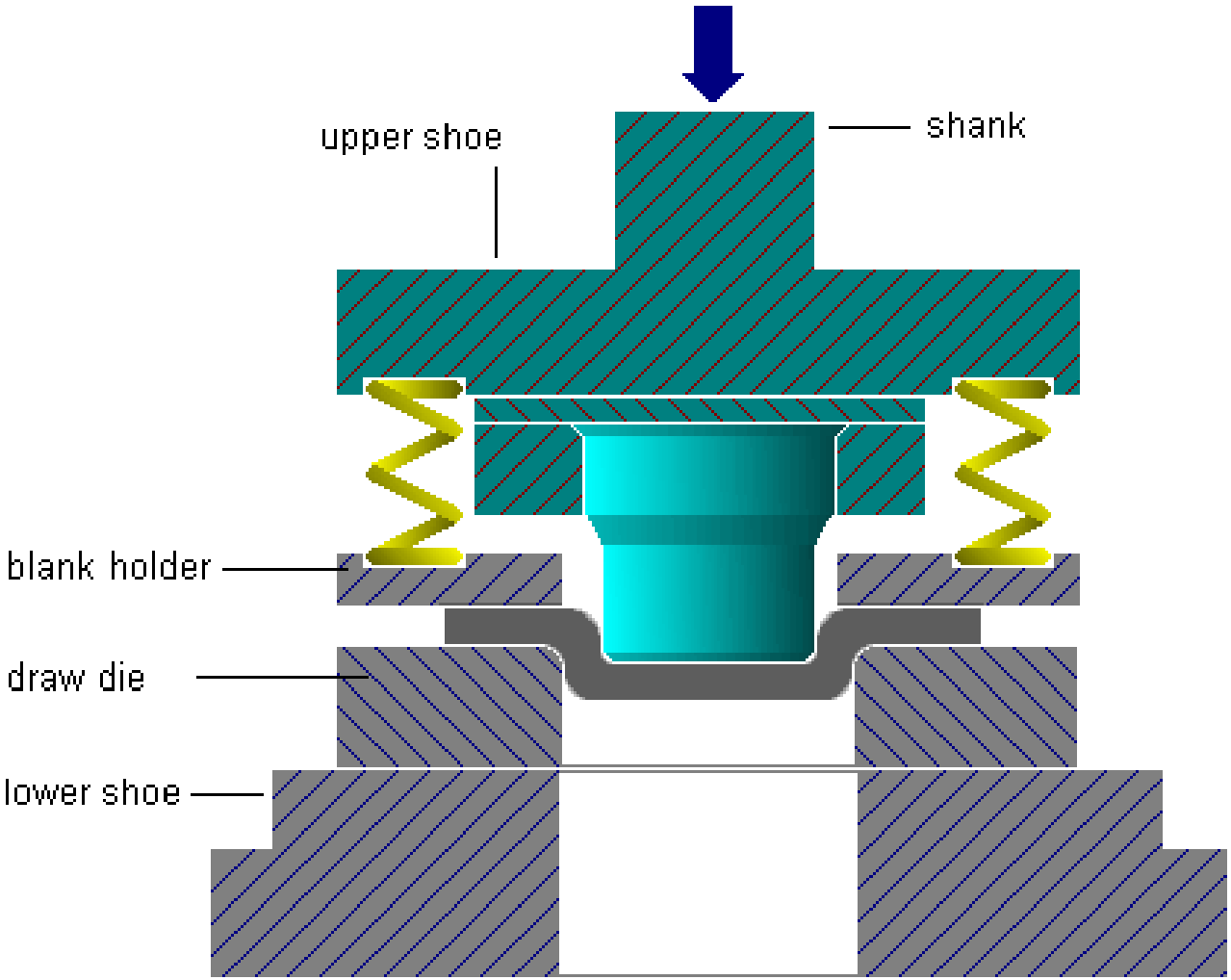

Deep Drawing Process

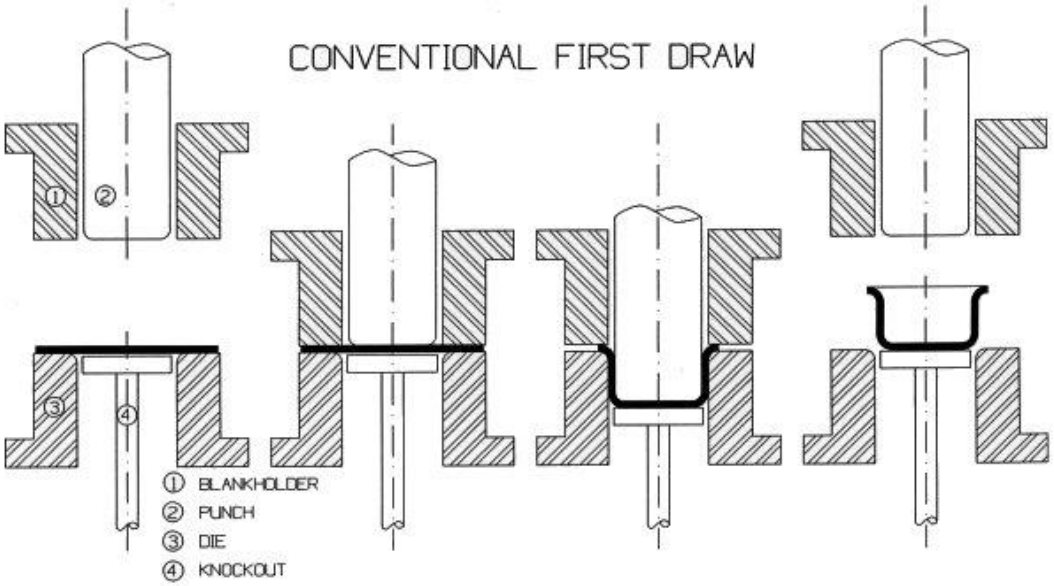

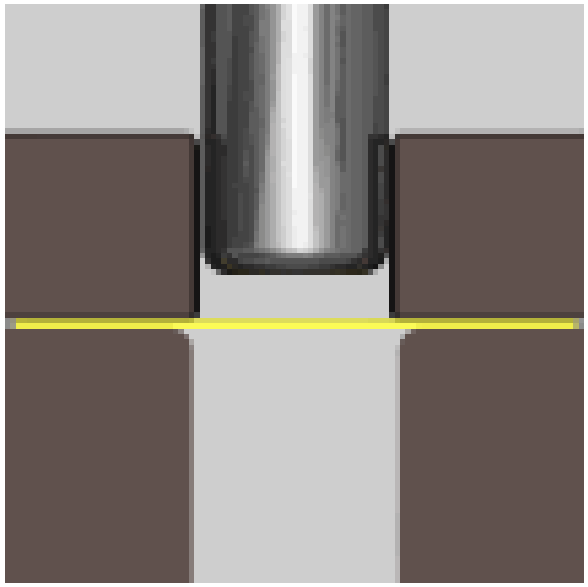

Stresses in Deep Drawing

Compressive hoops stresses in the flange

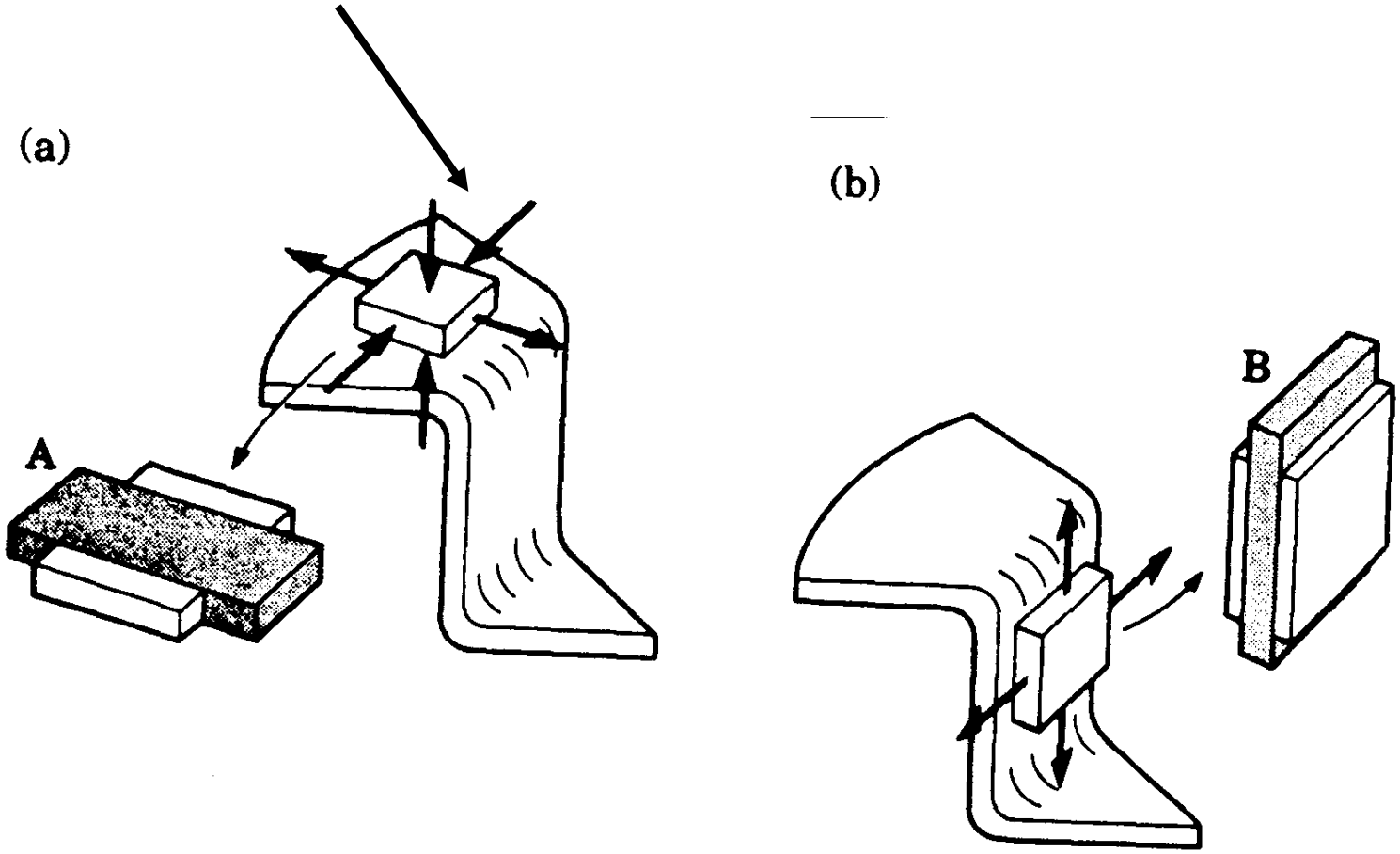

Drawing Parameters

- Wrinkling is caused by compressive (hoop) stresses that are induced as the blank moves into the die cavity
- Blankholder (or hold-down ring) pressure must be correct
  - Too much pressure causes tearing, too little causes wrinkling
  - Typically 0.7-1.0% of the sum of the UTS and yield strength

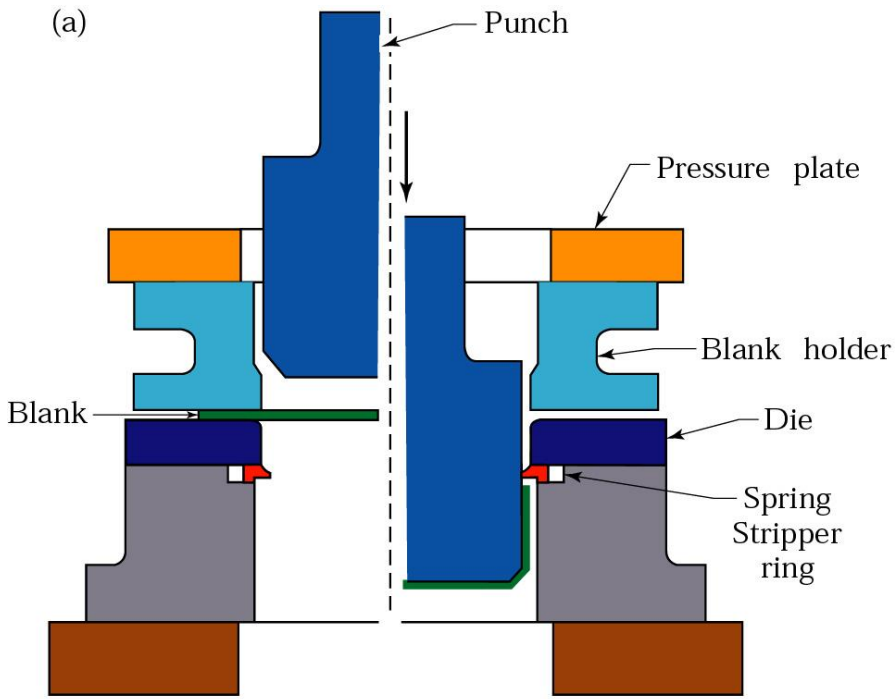

- If D_o-D_p < 5T, deep drawing may be successfully achieved without a blankholder

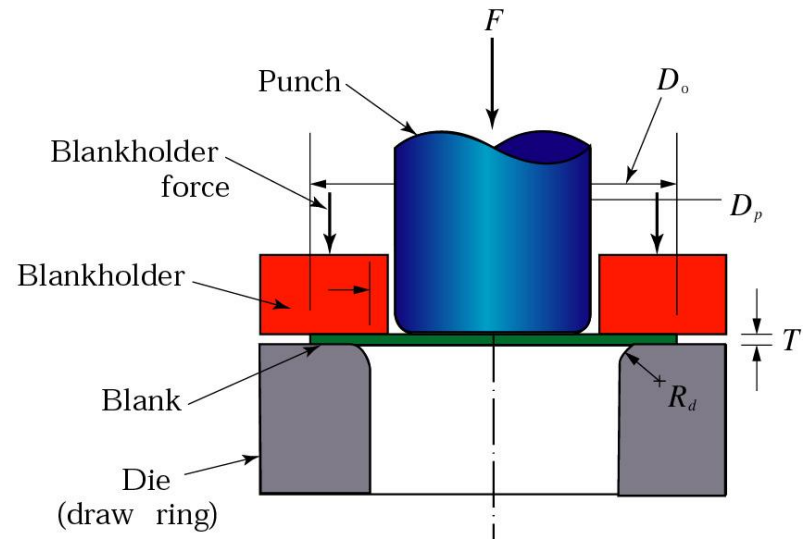

Drawing Parameters

- Clearance is usually 7-14% sheet thickness
- Deep drawability is expressed by the limiting drawing ratio

$$LDR = \frac{MaximumBlankDiameter}{PunchDiameter} = \frac{D_o}{D_p}$$

- Normal anisotropy

$$R = \frac{WidthStrain}{ThicknessStrain} = \frac{\varepsilon_w}{\varepsilon_t}$$

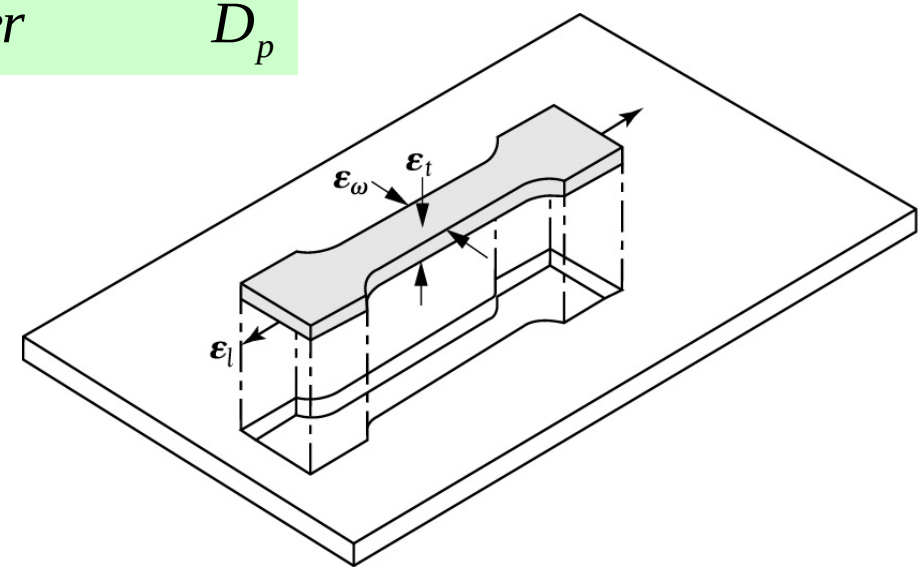

- R for rolled sheet metal

$$R_{avg} = \frac{R_0 + 2R_{45} + R_{90}}{4}$$

Drawing Parameters

- Planar anisotropy determines whether earing will occur
- If $\Delta R=0$ no ears form
- Ear height increases with ΔR
- Low ΔR and high R_{avg} is desired, but, tend to increase together

$$\Delta R = \frac{R_0 - 2R_{45} + R_{90}}{2}$$

Earing in a drawn steel cup, caused by the planar anisotropy of the sheet metal.

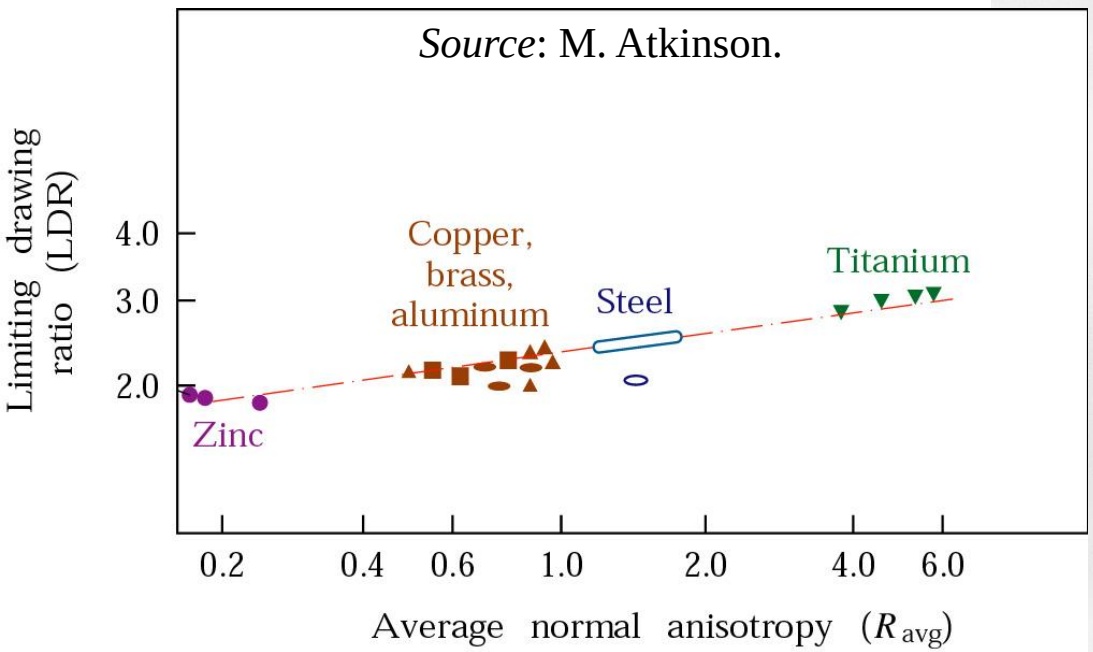

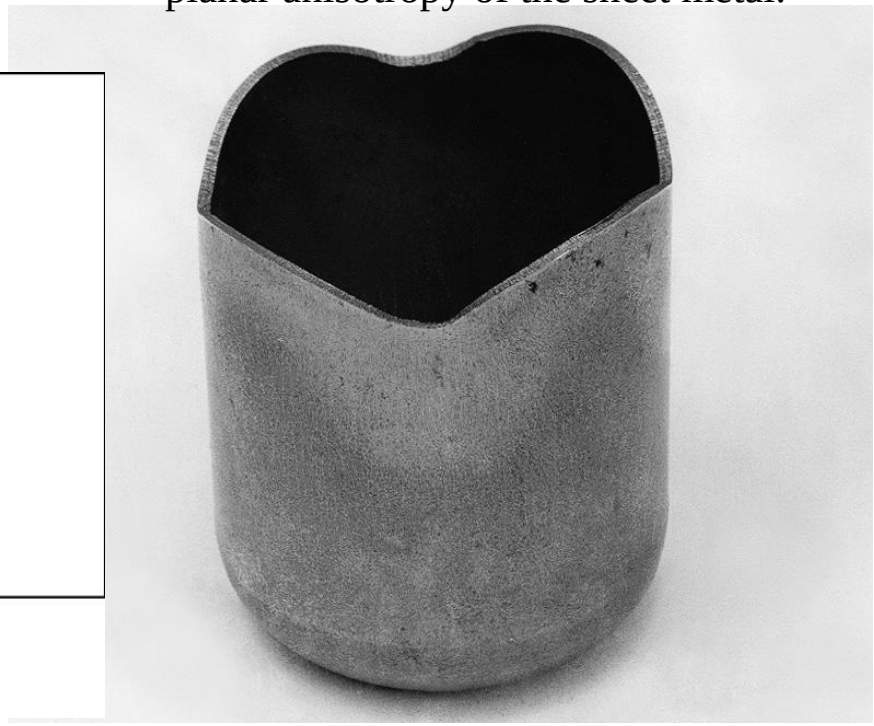

Redrawing

Reduces cup diameter and elongates walls

Forward redrawing

Reverse redrawing

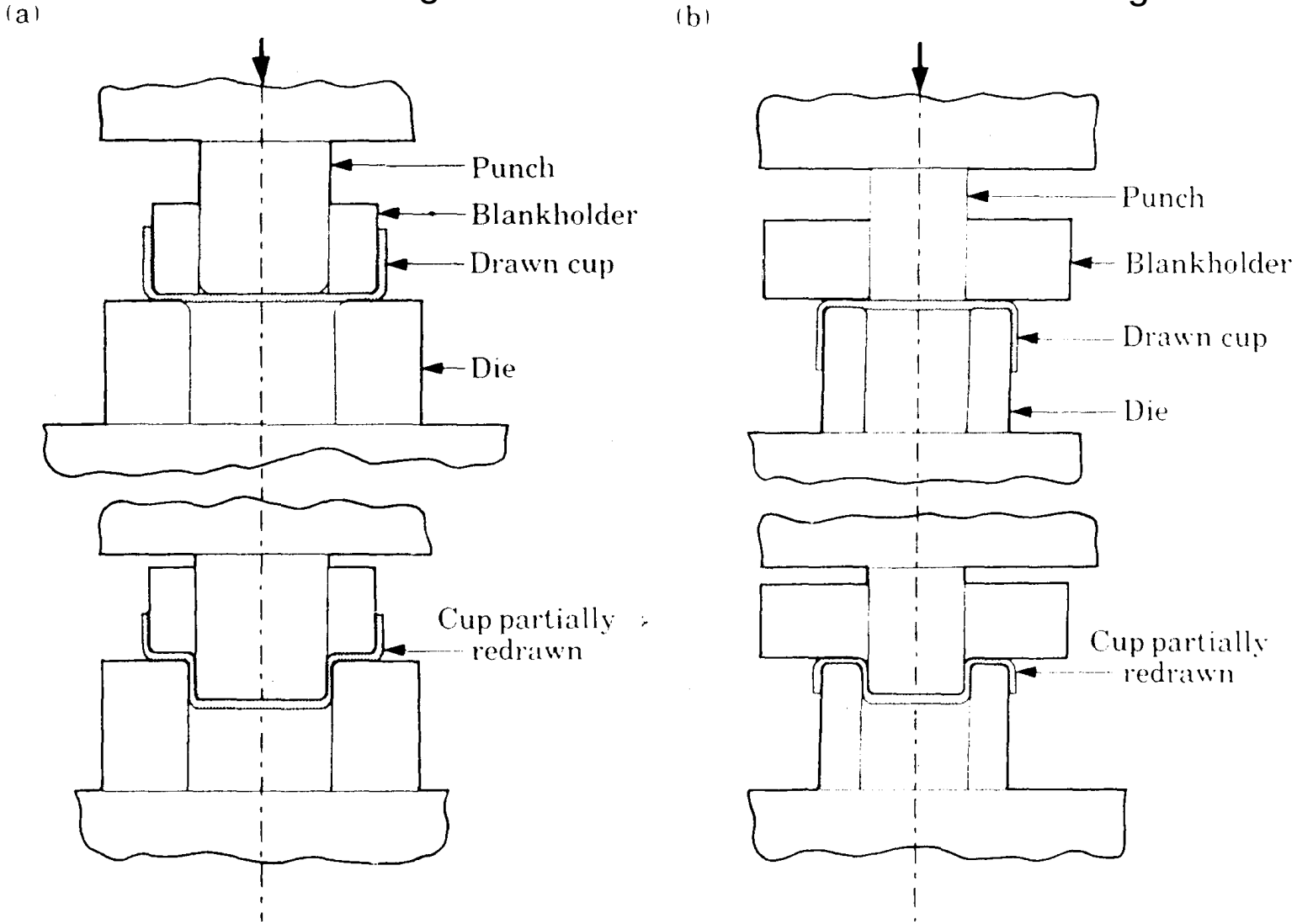

Deep Drawing and Redrawing

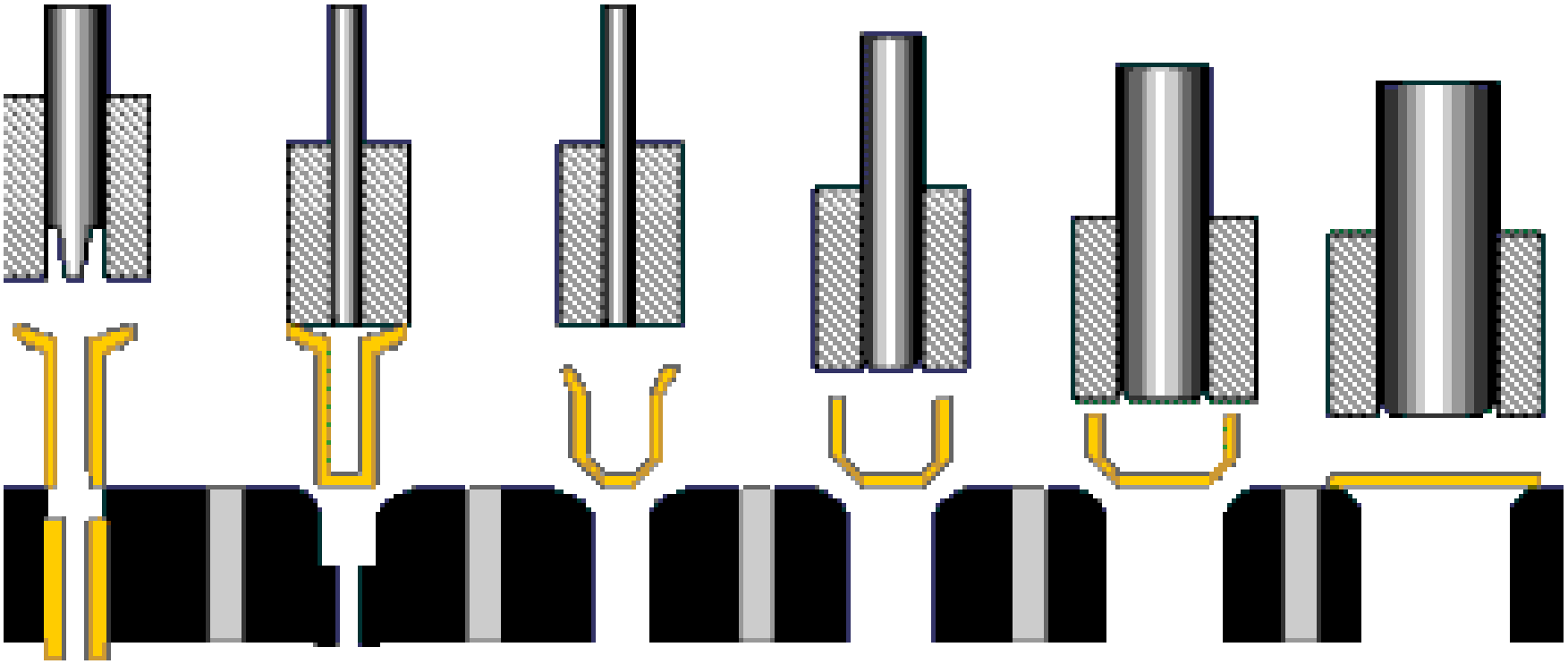

Ironing

Elongates and thins walls of the cup

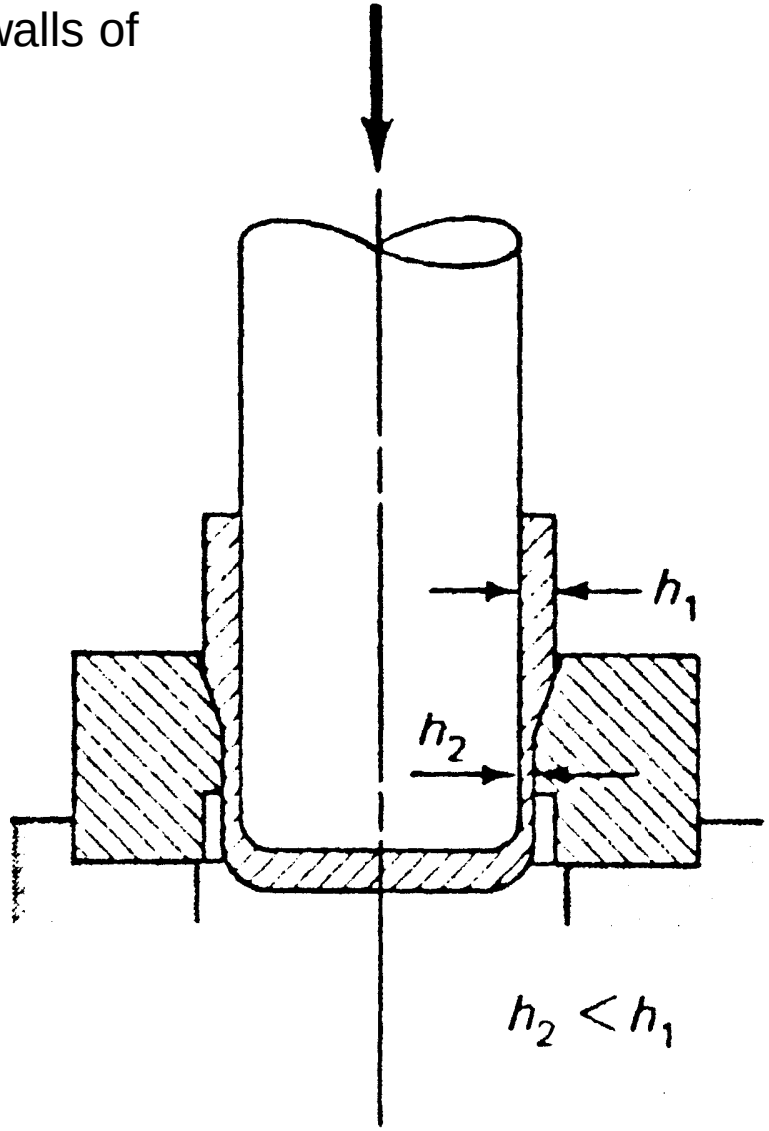

Deep Drawing

- Products: pots, food and beverage containers, kitchen sinks, car fuel tanks

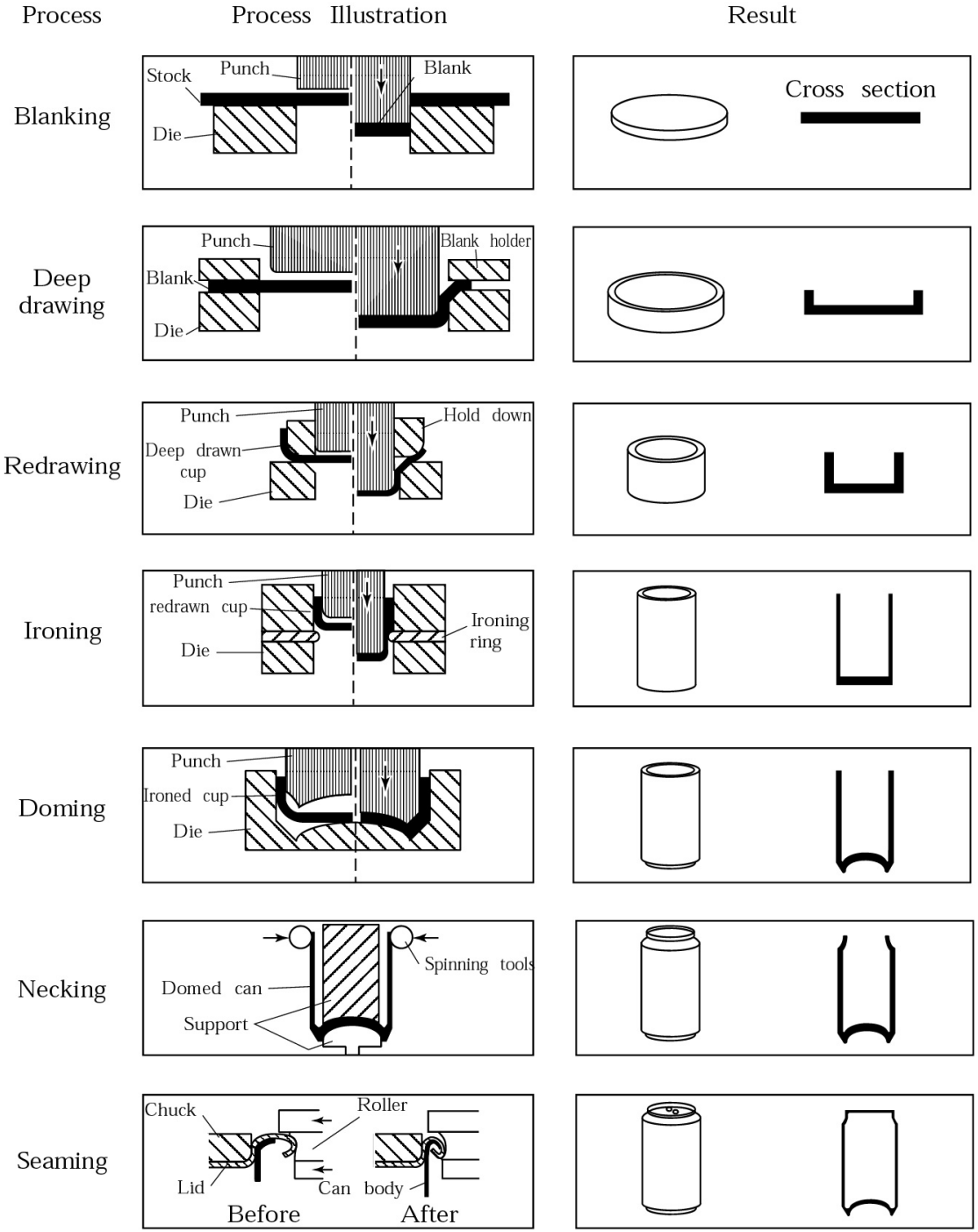

The metal- forming processes involved in manufacturing a two-piece aluminum beverage can

Drawing of More Complex Shapes

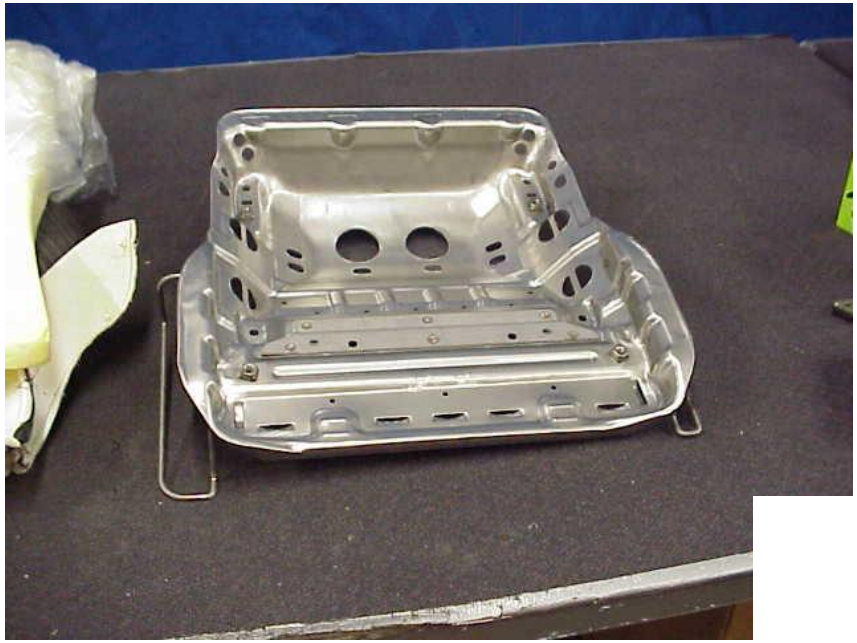

Numerous products including kitchen hardware, sinks, car body parts, etc.

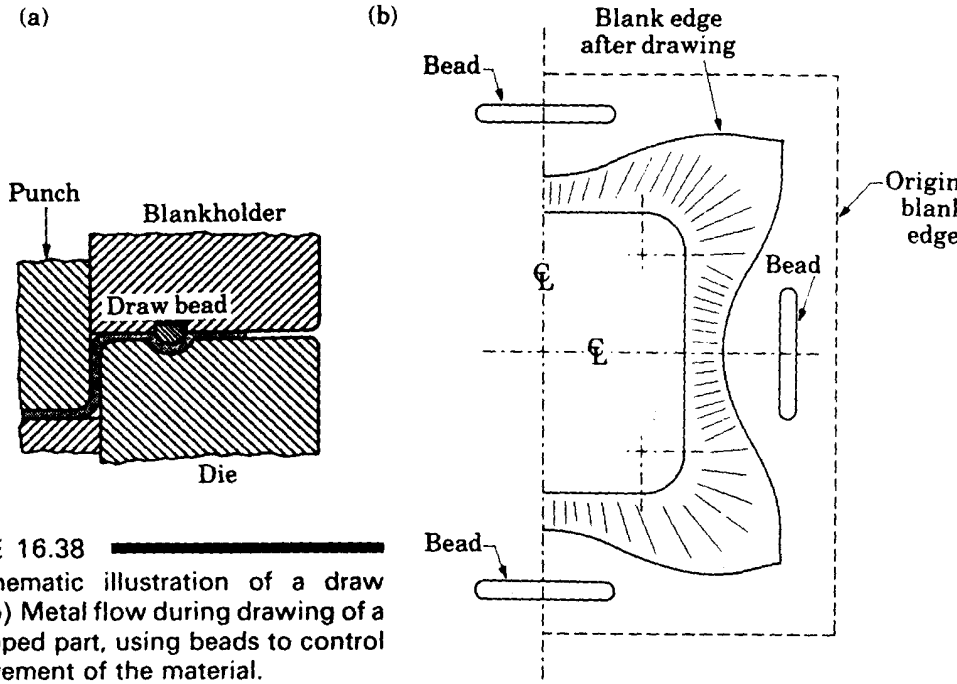

FIGURE 16.38 (a) Schematic illustration of a draw bead. (b) Metal flow during drawing of a box-shaped part, using beads to control the movement of the material.

Starting blank shape needs to be designed

Draw beads are necessary to control the material inflow

Stretch Forming

- Sheet metal is clamped at edges and stretched over a die or form block
- Dies made of zinc alloys, steels, plastics, wood
- Little or no lubrication
- Low-volume, versatile, and economic production

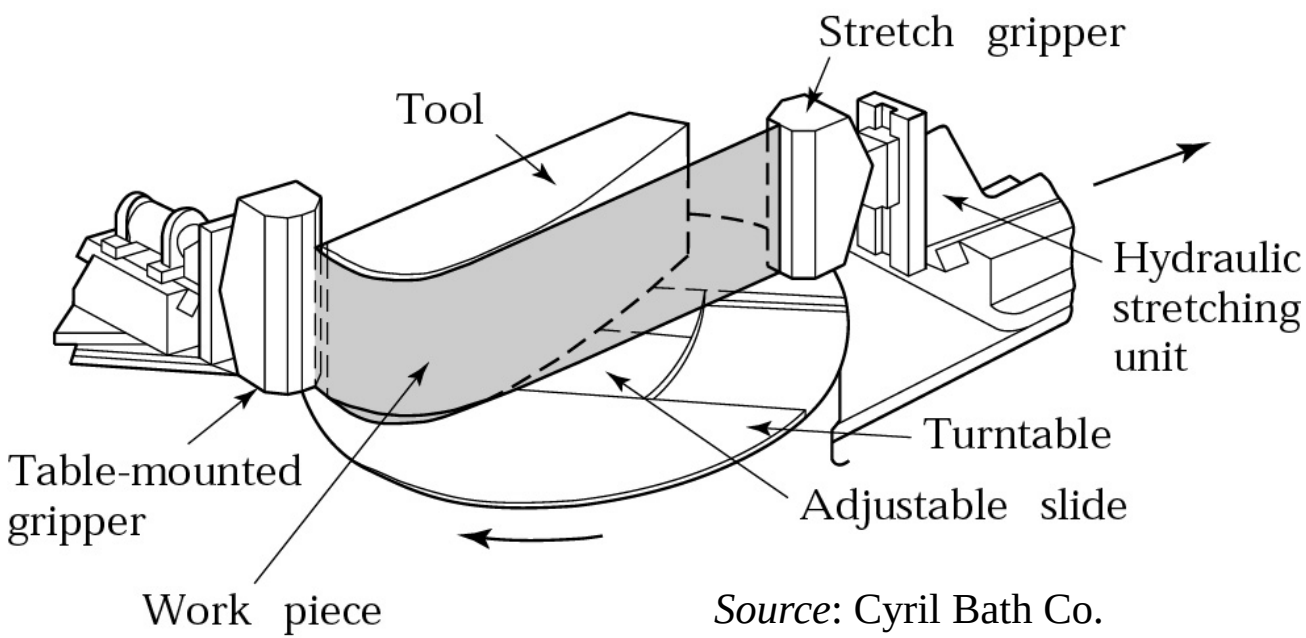

Source: Cyril Bath Co.

- Products: aircraft wing skin panels, automobile door panels, window frames

Tube Bending and Bulging

- Bending and forming hollow sections with filler in order to avoid buckling and folding
- Fill with loose particles (sand), flexible mandrels, polyurethane, water or other fluid

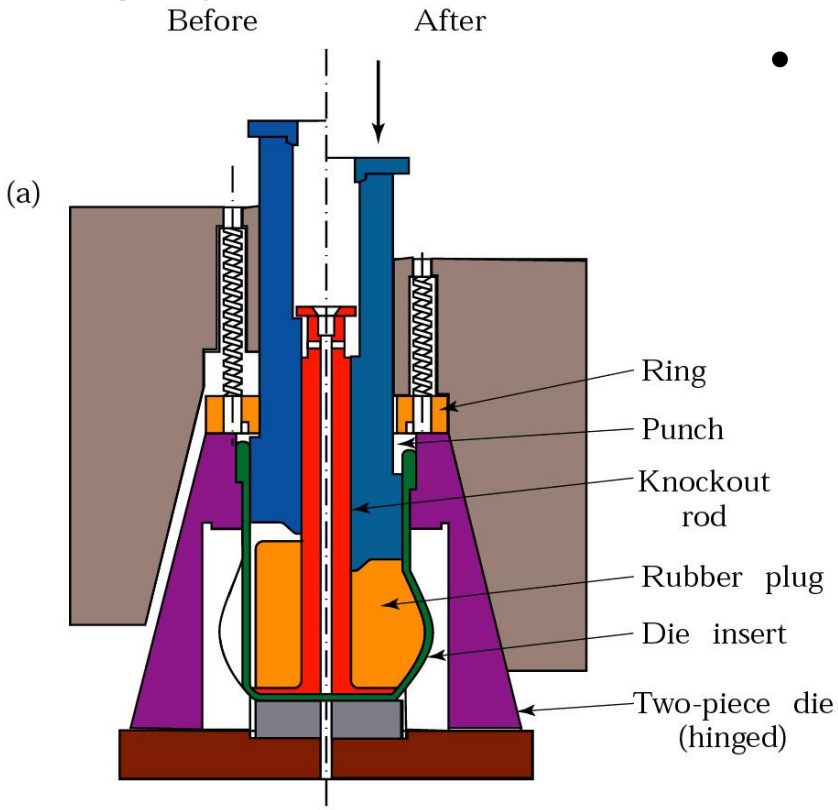

- Products: barrels, beads on drums, exhaust pipes, manifolds, water pitchers, plumbing fittings

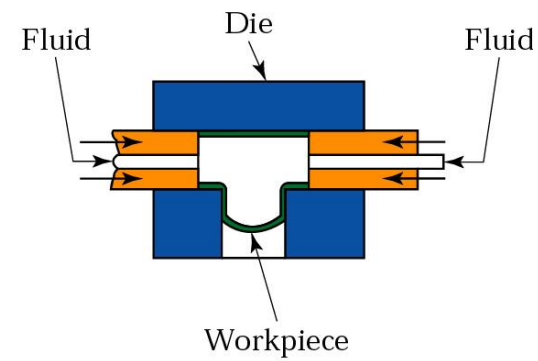

Source: J. A. Schey, *Introduction to Manufacturing Processes* (2d ed.) New York: McGraw-Hill, 1987.

Other Forming Operations

- Embossing – shallow dies typically for decoration
- Rubber Forming – one of the dies is replaced by a flexible material, such as polyurethane
- Hydroform or Fluid-forming – pressure over the rubber membrane is maintained with fluid

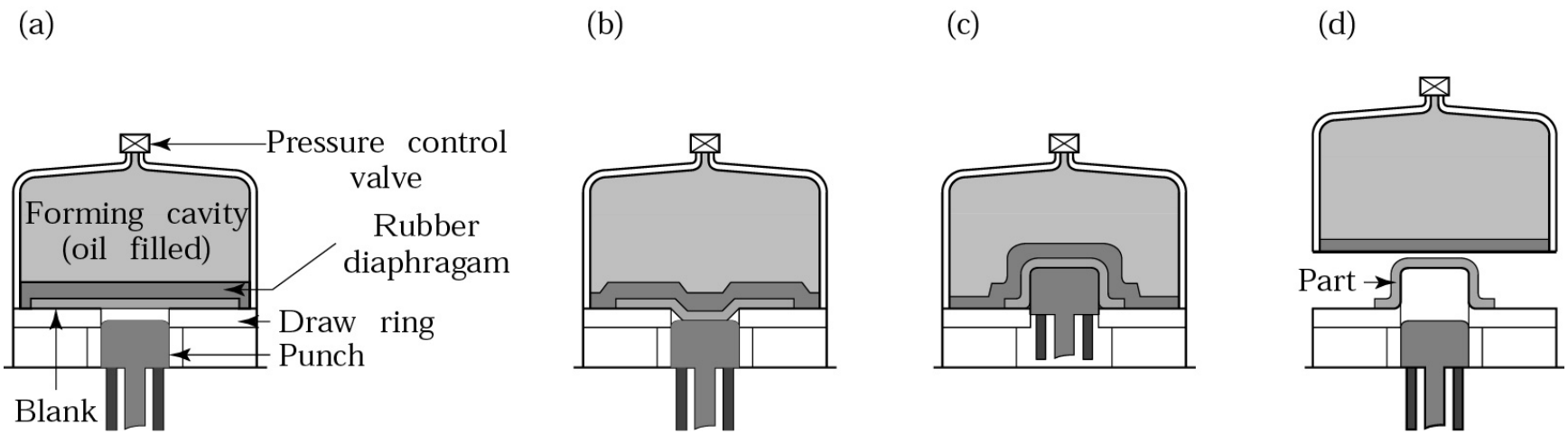

- Conventional, shear, and tube spinning – circular blank is held against a shaped mandrel and rotated

Metal Spinning

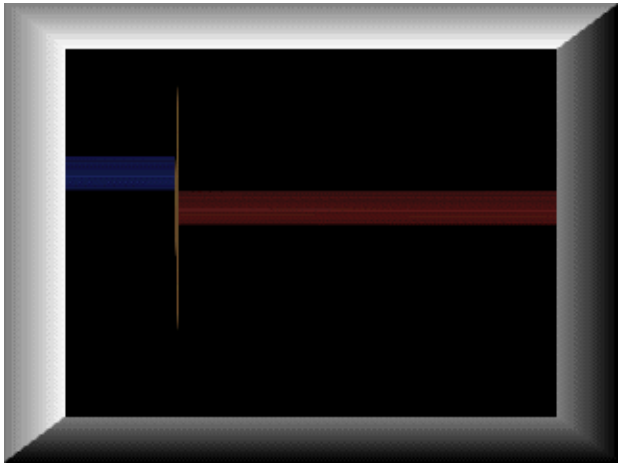

- Incremental forming of axisymmetric hollow shapes
- Motions similar to a metal cutting lathe
- Manual and CNC controlled machines available

Metal Spinning

Other Forming Operations

- Superplastic forming
- Explosive forming – controlled use of explosive energy
  - p is pressure in psi
  - K is a constant (21600 for TNT)
  - W is weight of explosive (lbs)
  - R distance of explosive from workpiece
  - a is a constant (generally 1.15)

$$p = K\left(\frac{\sqrt[3]{W}}{R}\right)^a$$

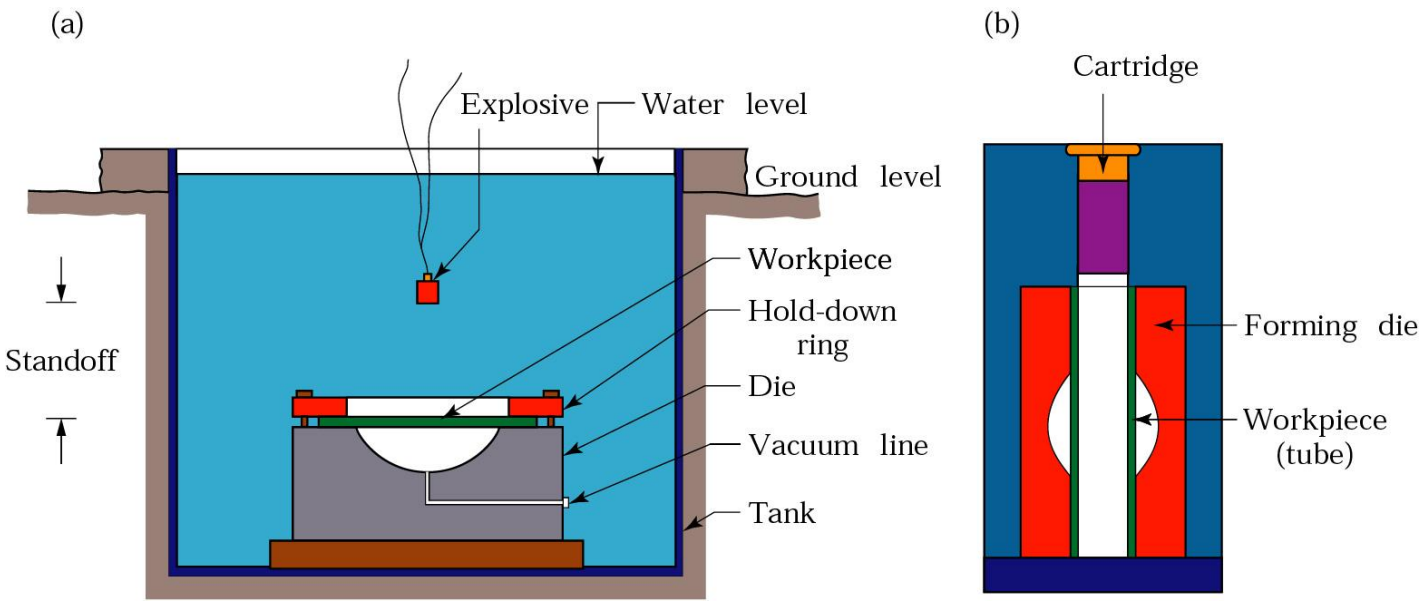

Other Forming Operations

- Peen Forming – surface of sheet metal is exposed to compressive stresses
- Laser forming and laser assisted forming
- Gas and liquified gases mixtures as energy source
- Electrohydraulic forming
- Magnetic-Pulse Forming

(b)

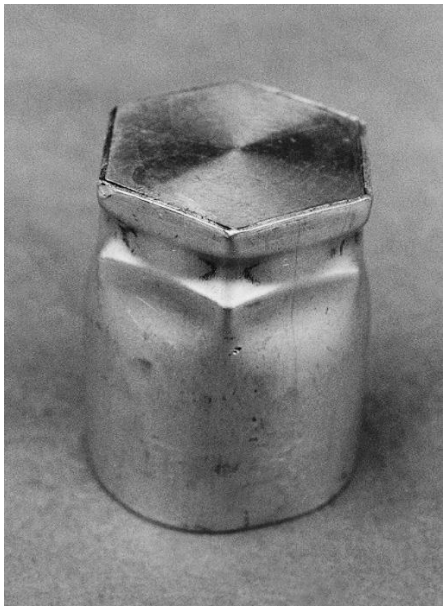

(a)

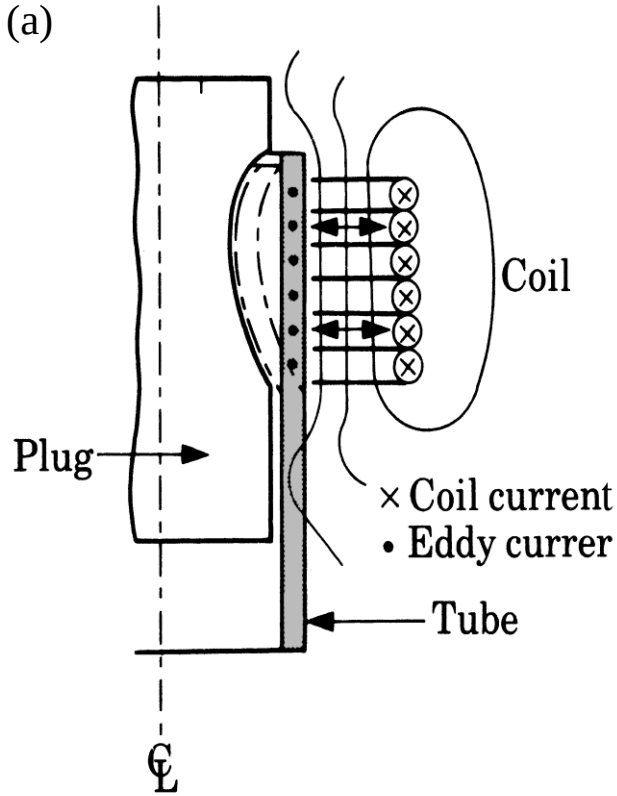

(a) Schematic illustration of the magnetic-pulse forming process used to form a tube over a plug. (b) Aluminum tube collapsed over a hexagonal plug by the magnetic-pulse forming process.